MP C2004/MP C2504/MP C2094/MP C2594 series

(D243/D244)

Parts Catalog

Copyright (c) 2006-2016 Ricoh Company, Ltd. 2016/07/29 Version 1.00

Model	Product Code	PC Style
Ricoh: MP C2004SP/C2004ASP/C2004SPG/C2094SPJ	D243	3D
Ricoh: MP C2504SP/C2504ASP/ C2504SPG/C2594SPJ	D244	3D
SPDF DF3100	D3B0	3D
Booklet Finisher SR3220	D3B9	3D
1 Bin Tray BN3110	D3CQ	3D
Bridge Unit BU3070	D685	3D
Internal Finisher SR3130	D690	3D
Side Tray Type M3	D725	3D
Punch Unit PU3050	D717	3D
Punch Unit PU3040	D716	3D
Paper Feed Unit PB3150	D691	3D
Internal Shift Tray SH3070	D3BD	3D
ARDF DF3090	D779	3D
Paper Feed Unit PB3220(NA、AA) Paper Feed Unit PB3210(EU)	D787	3D
IEEE 802.11a/g/n Interface Unit Type M19	D3BR	2D
Memory Unit Type M19 4GB	D3BX	2D
Extended USB Board Type M19	D3BS	2D
IEEE 1284 Interface Board Type M19	D3C0	2D
XPS Direct Print Option Type M19	D3BC	2D
USB Device Server Option Type M19	D3BC	2D
PostScript3 Unit Type M19	D3BD	2D
Camera Direct Print Card Type M19	D3BD	2D
File Format Converter Type M19	D3BR	2D
DataOverwriteSecurity Unit Type M19	D3BS	2D
Imageable Area Extension Unit Type M19	D3BR	2D
Enhanced Security HDD Option Type M12	D3A6	2D
OCR Unit Type M13	D3AC	2D
Fax Option Type M19	D3BV	2D
G3 Interface Unit Type M19	D3BV	2D
FAX Memory Unit Type M19 64MB	D3BZ	2D
Fax Connection Unit Type M19	D3BD	2D
Handset HS3020	D739	2D
NFC Card Reader Type M19	D3BS	2D
Smart Card Reader Built-in Unit Type M19	D3BS	2D
External Keyboard Bracket Type M19	D3BR	2D
Caster Table Type M3	D178	2D
Platen Cover PN2000	D700	2D
ADF Handle TypeC	D593	2D
Card Reader Bracket Type 3352	D593	2D
Key Counter Bracket Type M3	D739	2D
Bluetooth Interfance Unit Type D	D566	2D
Smart Operation Panel(D241)	D241	2D

Unit All

U001
EXTERIOR

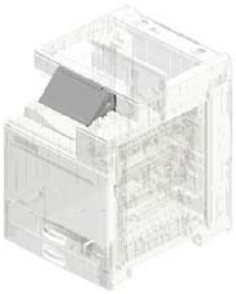

U002
OPERATION

U003
SCANNER

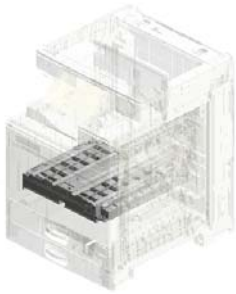

U004
LASER UNIT

U005
PAPER FEED

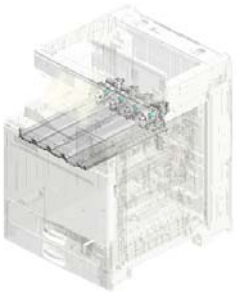

U006
TONNER SUPPRY

U007
PCDU

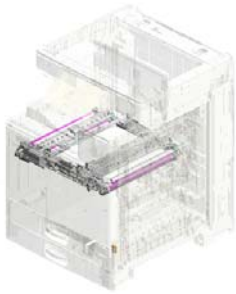

U008
ITB UNIT

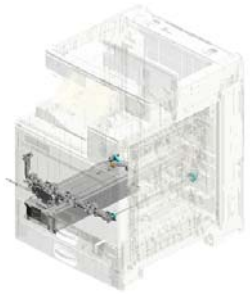

U009
USED TONER

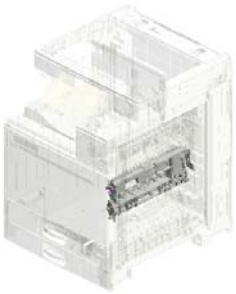

U010
SEPARATION/TRANSPORT

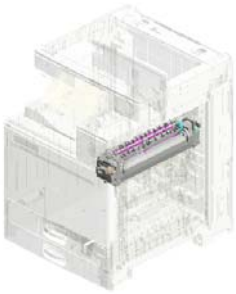

U011
FUSING

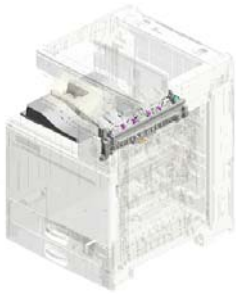

U012
PAPER EXIT

Copyright (c) 2006-2016 Ricoh Company, Ltd. 2016/07/29 Version 1.00

Unit All

U013
DUPLEX

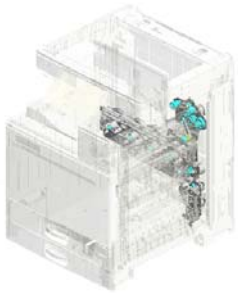

U014
MAIN DRIVE

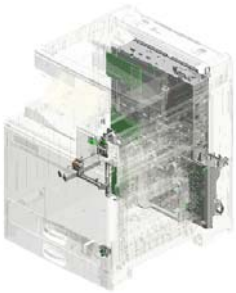

U015
ELECTRICAL

U016
MAIN FRAME

Copyright (c) 2006-2016 Ricoh Company, Ltd. 2016/07/29 Version 1.00

U001
EXTERIOR

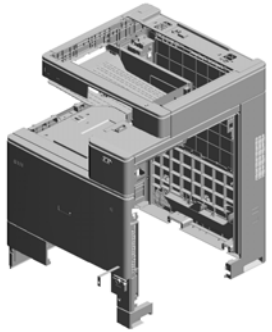

14.D1491243
COVER:FRONT:UPPER:OPERATION SUB-UNIT

20.D1491281
COVER:SCANNER:FRONT

5.52062686
SNAP RING

7.AA143537
(x2)
SCREW:M3:BLACK

12.D1491234
COVER:UPPER:INNER BACK:MIDDLE

1.04543006Q (x 1)
TAPPING SCREW - M3X6
4.04583008N (x 3)
HEXAGON HEAD TAPPING SCREW:3X8

9.AG070513
MAGNET CATCH

19.D1491278
TORSION SPRING:COVER:USED TONER

15.D1491248
HINGE:COVER:FRONT:USED TONER

18.D1491274
INNER COVER:FRONT:USED TONER

6.AA021031
MAGNETIC CATCH

8.AA143595
STEPPED SCREW:M3

10.D1441085
(x7)
STEPPED SCREW:M3

16.D1491252
COVER:LEFT:UPPER:REAR

13.D1491237
COVER:UPPER:INNER BACK:LEFT LOWER

17.D1491257
CAP:34X55

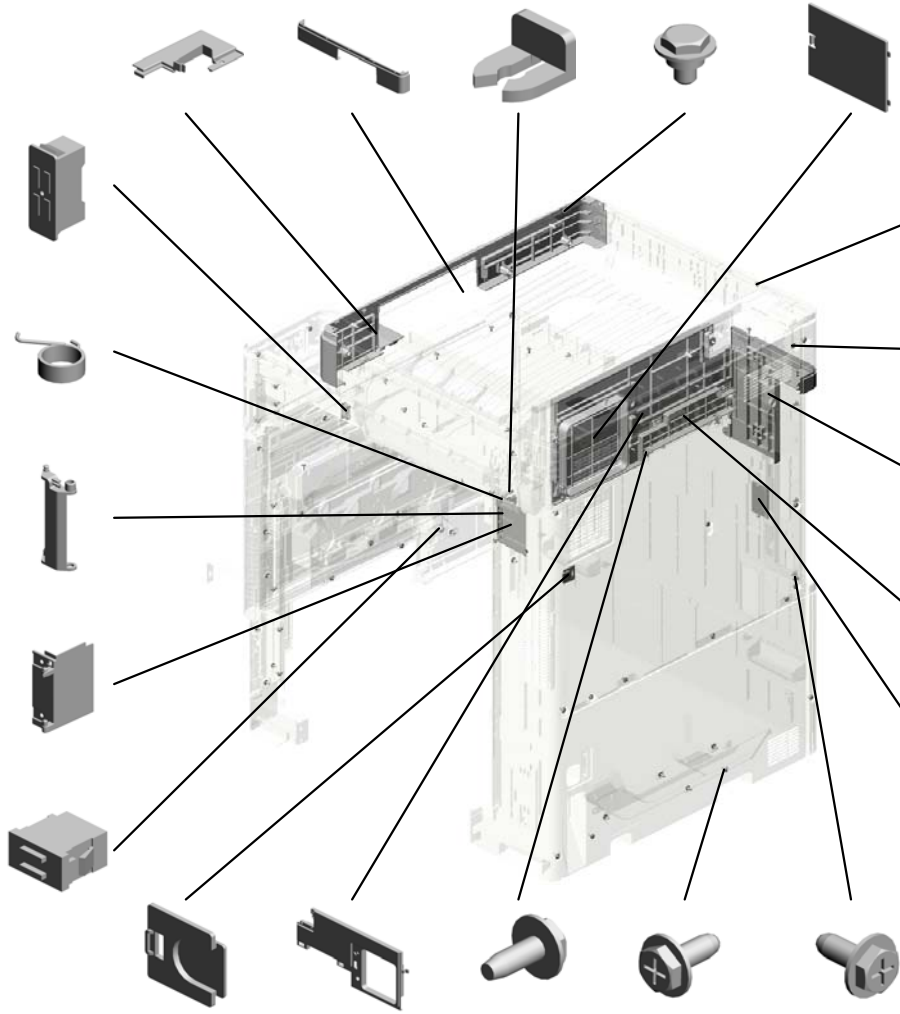

21.D1491291
CAP:HARNESS

11.D1491233
COVER:UPPER:INNER BACK

4.04583008N
(x20)
HEXAGON HEAD TAPPING SCREW:3X8

3.04543008Q
(x5)
TAPPING SCREW:3X8

2.04543008N
(x52)
TAPPING SCREW:ROUND POINT:3X8

Copyright (c) 2006-2016 Ricoh Company, Ltd. 2016/07/29 Version 1.00

U001
EXTERIOR

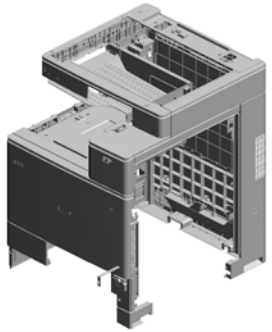

38.D1771302
CLEANER:SHIELD GLASS:ASS'Y

41.D2411231
COVER:UPPER:FRONT

28.D1496859
DECAL:CLEANING: SHIELD GLASS

36.D1501282
COVER:SCANNER: UPPER:FRONT

25.D1494492
TRAY:REVERSE

30.D1496894
DECAL:PCU:CYAN

24.D1491307
SPRING PLATE:BAND

29.D1496893
DECAL:PCU:BLACK

26.D1495883
KEYTOP:MAIN SWITCH

27.D1495884
COMPRESSION SPRING:KEYTOP

34.D1501235
COVER:UPPER:INNER BACK:BIN

37.D1501290
COVER:SCANNER: UPPER:REAR

40.D2411230
COVER:UPPER

22.D1491294
CAP:HARNESS:CORNER

39.D2391255
COVER:LEFT:INTERFACE

31.D1496895
DECAL:PCU:MAGENTA

32.D1496896
DECAL:PCU:YELLOW

23.D1491305 (x2)
CAP:TOTAL COUNTER

35.D1501250
COVER:LEFT

33.D1497984
DUCT:REAR:POWER SUPPLY UNIT

Copyright (c) 2006-2016 Ricoh Company, Ltd. 2016/07/29 Version 1.00

U001
EXTERIOR

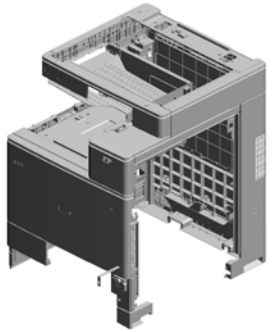

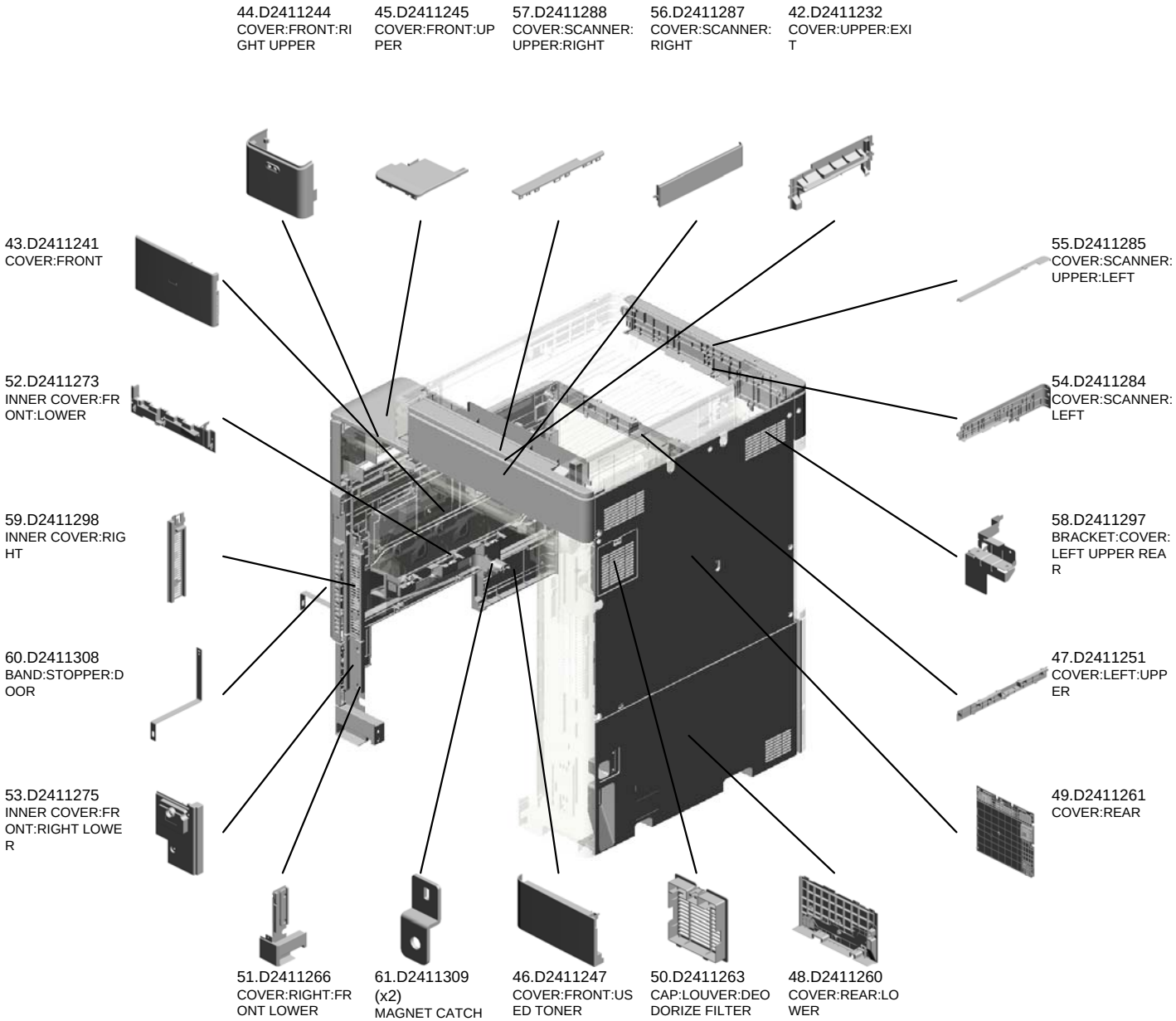

Copyright (c) 2006-2016 Ricoh Company, Ltd. 2016/07/29 Version 1.00

U001
EXTERIOR

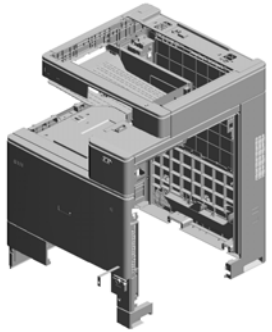

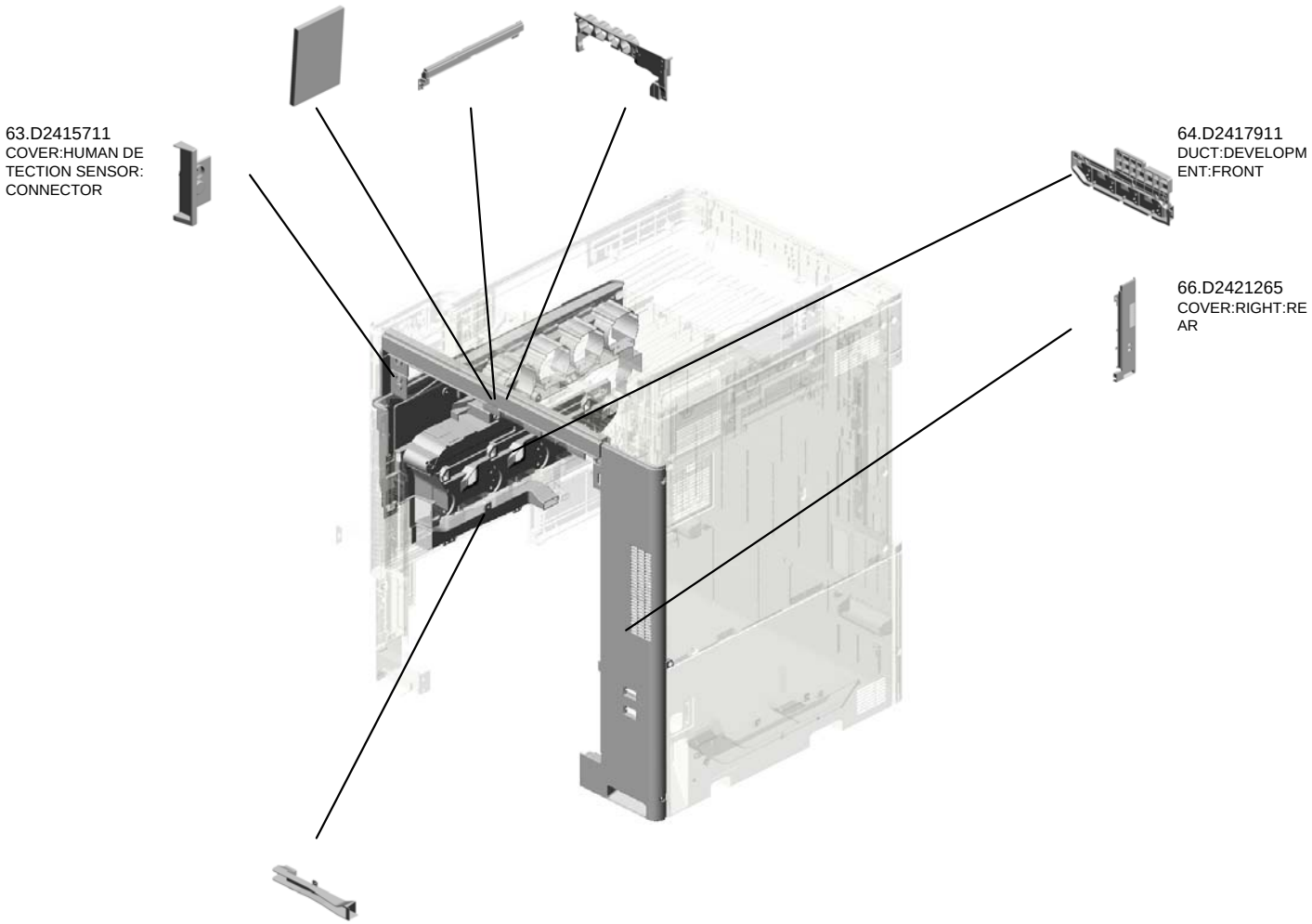

Copyright (c) 2006-2016 Ricoh Company, Ltd. 2016/07/29 Version 1.00

U002.OPERATION

U002 S001
D2411417
OPERATION SUB-UNIT:ASS'
Y

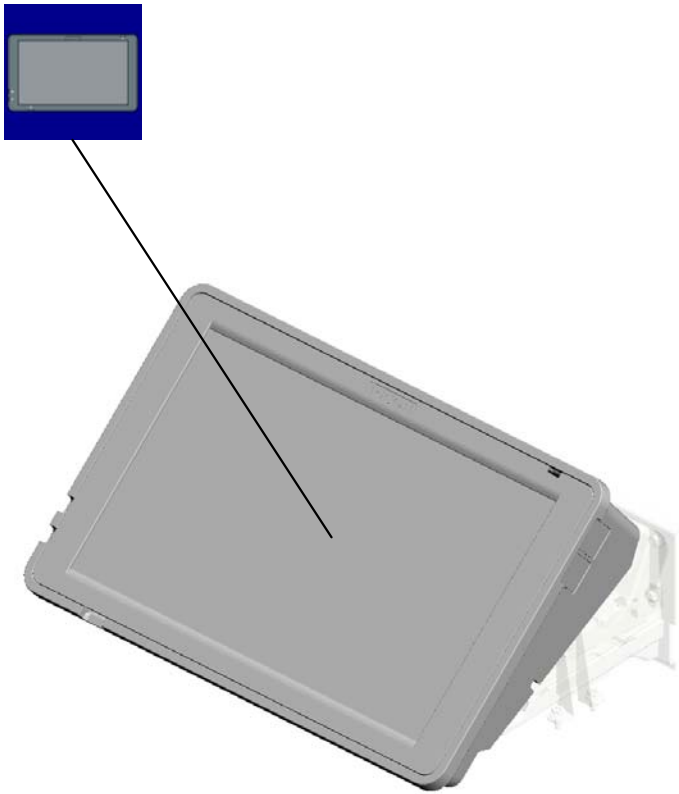

Copyright (c) 2006-2016 Ricoh Company, Ltd. 2016/07/29 Version 1.00

U002
OPERATION

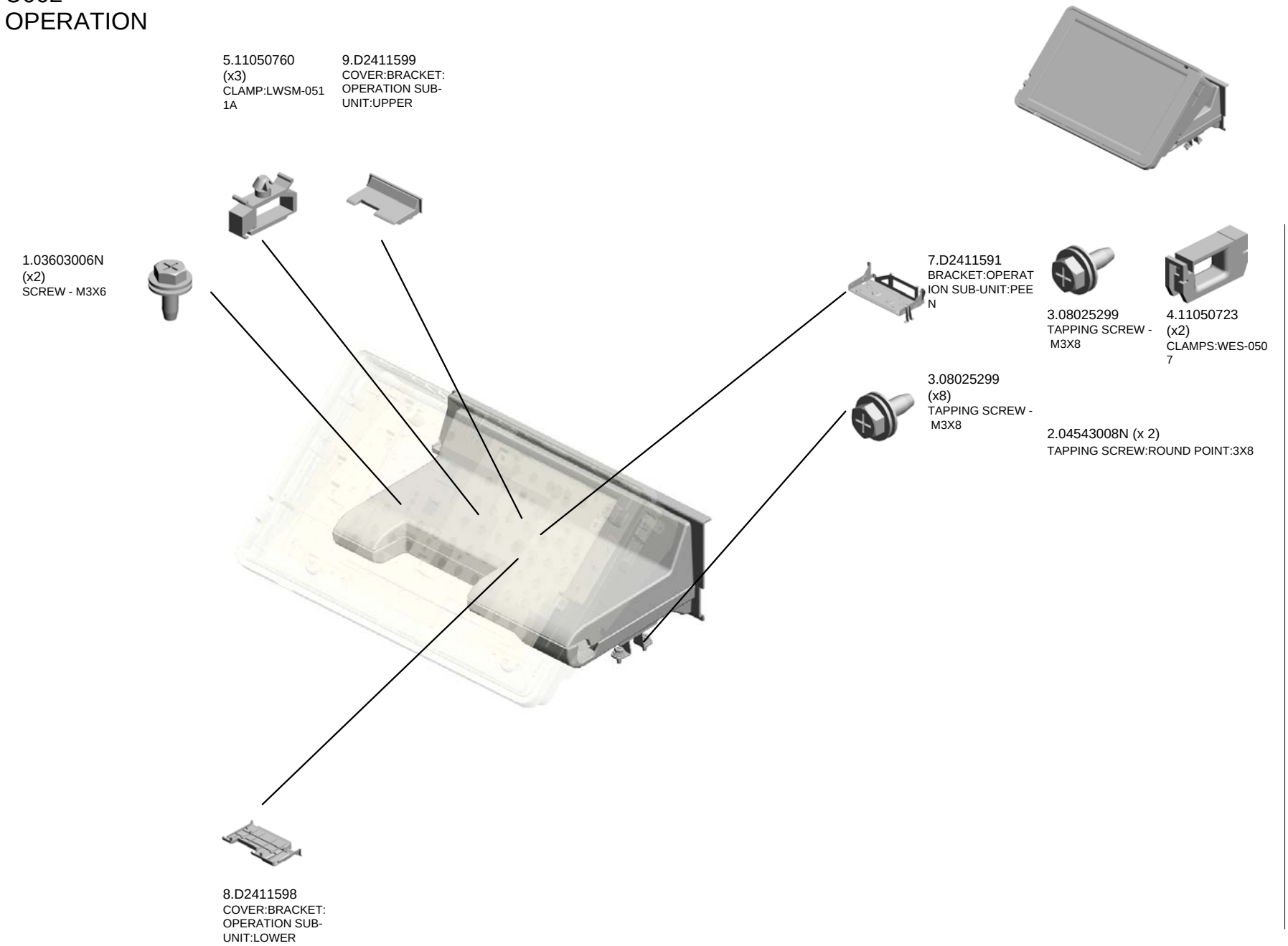

Copyright (c) 2006-2016 Ricoh Company, Ltd. 2016/07/29 Version 1.00

U002_S001
OPERATION SUB-UNIT:ASS'Y

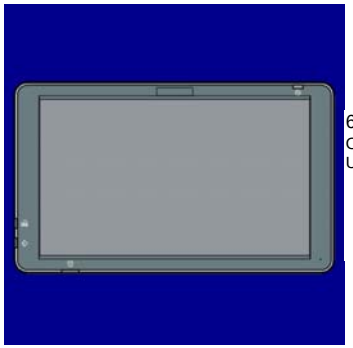

6.D2411417
OPERATION SUB-UNIT:ASS'Y

10.Note
See 2D parts catalog for the components of the Smart Operation Panel.

Copyright (c) 2006-2016 Ricoh Company, Ltd. 2016/07/29 Version 1.00

U003.SCANNER

U003 S001
D2891750
CARRIAGE:SCANNER:ASS'Y

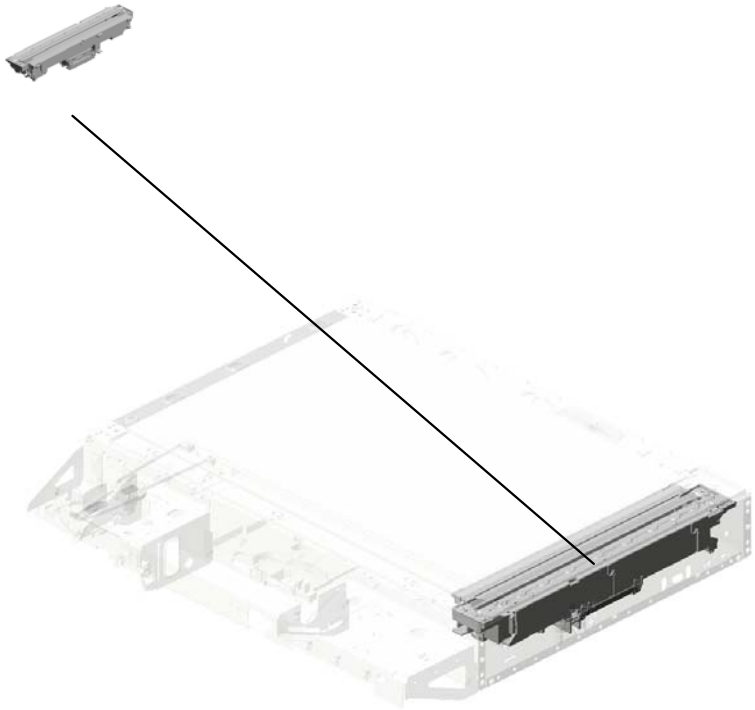

Copyright (c) 2006-2016 Ricoh Company, Ltd. 2016/07/29 Version 1.00

U003
SCANNER

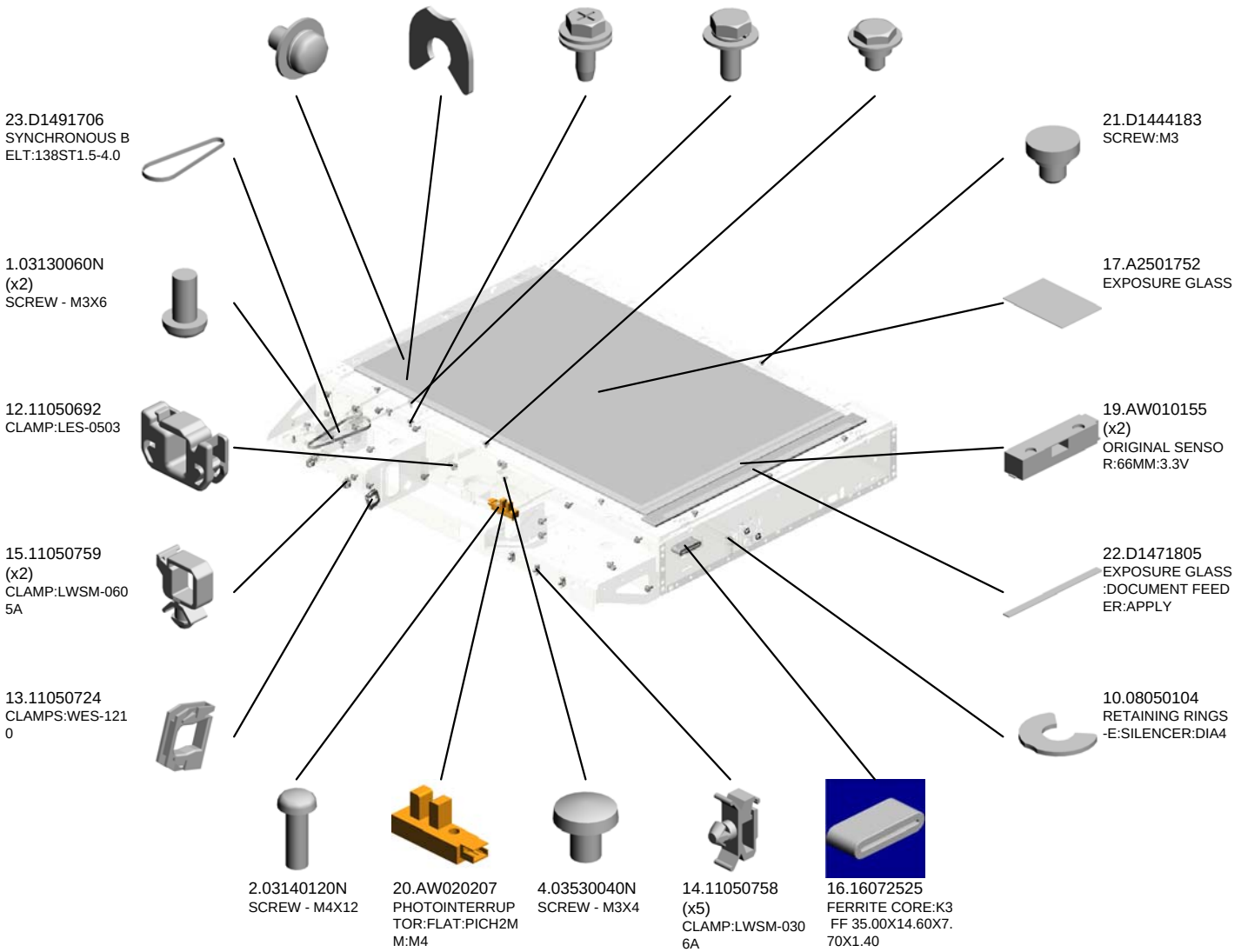

6.03603006N (x10)
SCREW - M3X6

Copyright (c) 2006-2016 Ricoh Company, Ltd. 2016/07/29 Version 1.00

U003
SCANNER

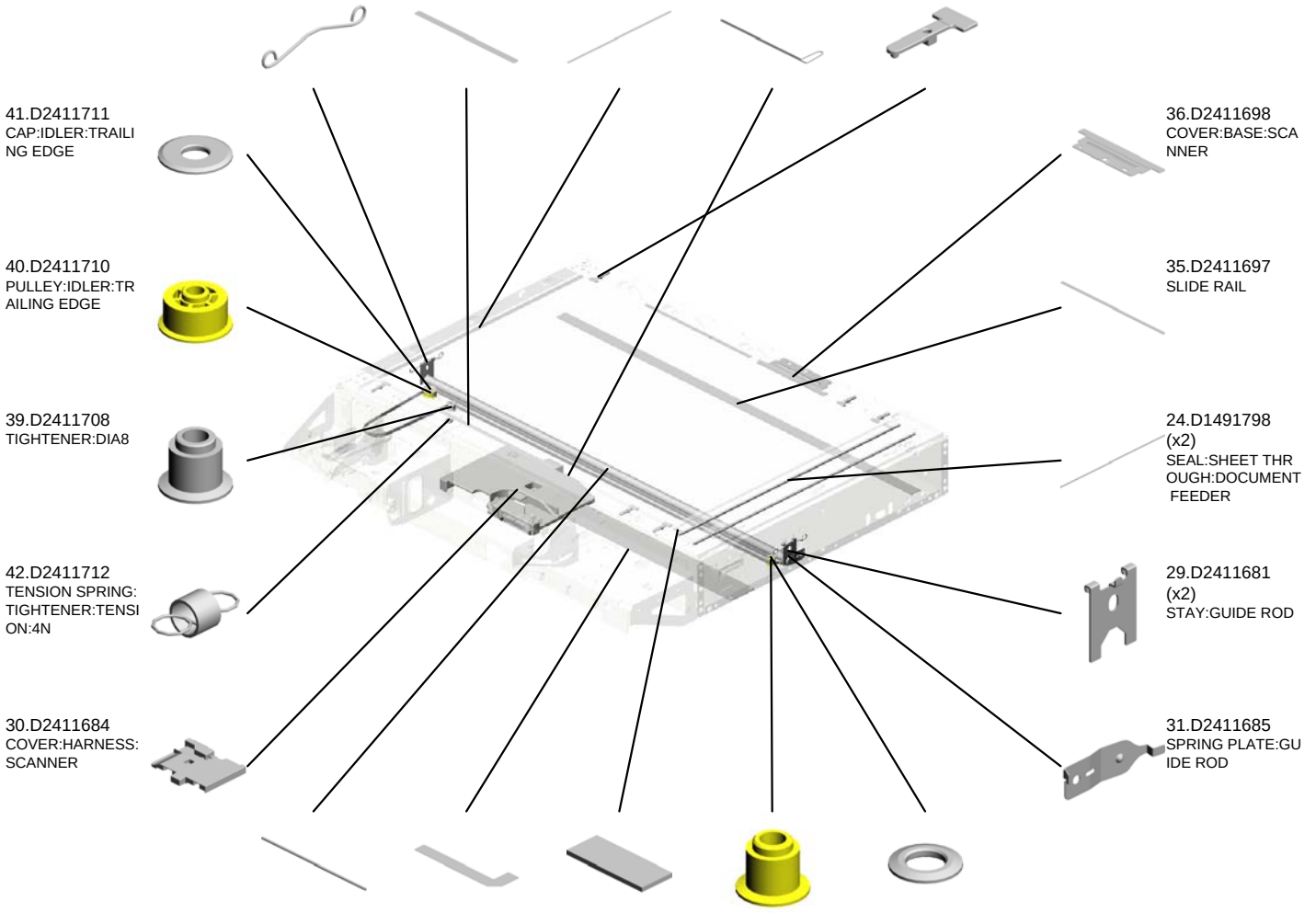

Copyright (c) 2006-2016 Ricoh Company, Ltd. 2016/07/29 Version 1.00

U003
SCANNER

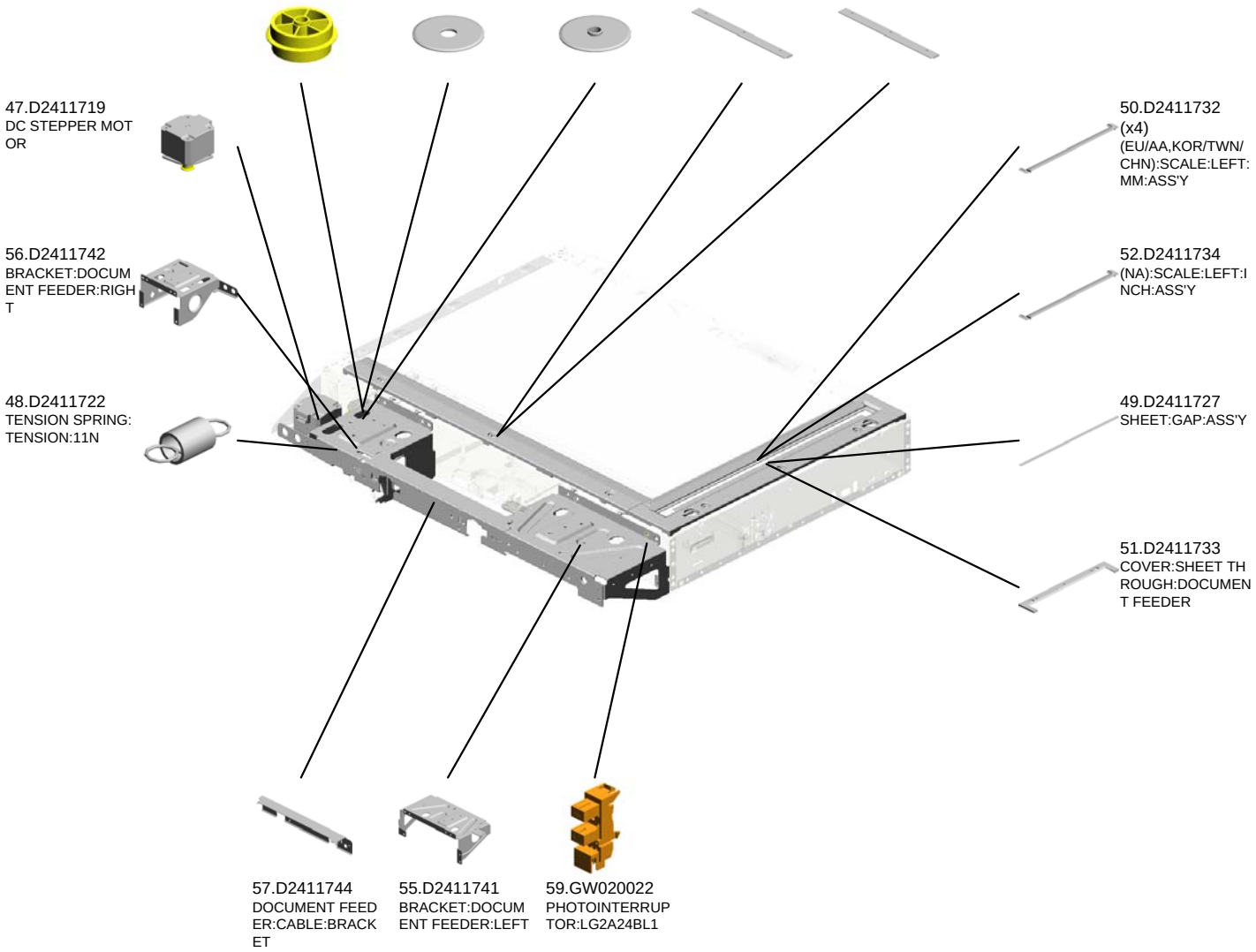

Copyright (c) 2006-2016 Ricoh Company, Ltd. 2016/07/29 Version 1.00

U003_S001
CARRIAGE:SCANNER:ASS'Y

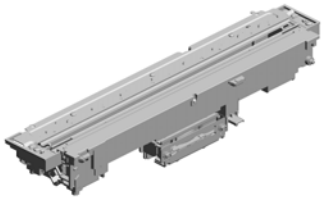

58.D2891750
CARRIAGE:SCANNER:ASS'Y

3.03530030N
(x2)
SCREW:M3X3

6.03603006N
(x2)
SCREW - M3X6

5.03530060N
(x3)
BIND SCREW - M3X6

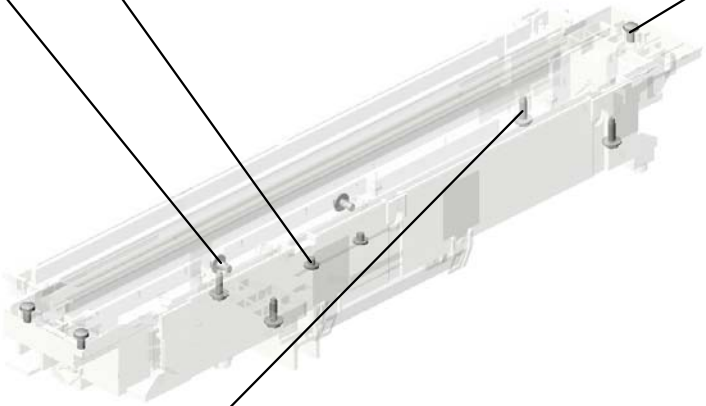

7.04583010N
(x4)
HEXAGON HEAD TAPPING SCREW:3X10

Copyright (c) 2006-2016 Ricoh Company, Ltd. 2016/07/29 Version 1.00

U004.LASER UNIT

U004 S001
D2391855
OPTICAL WRITING UNIT

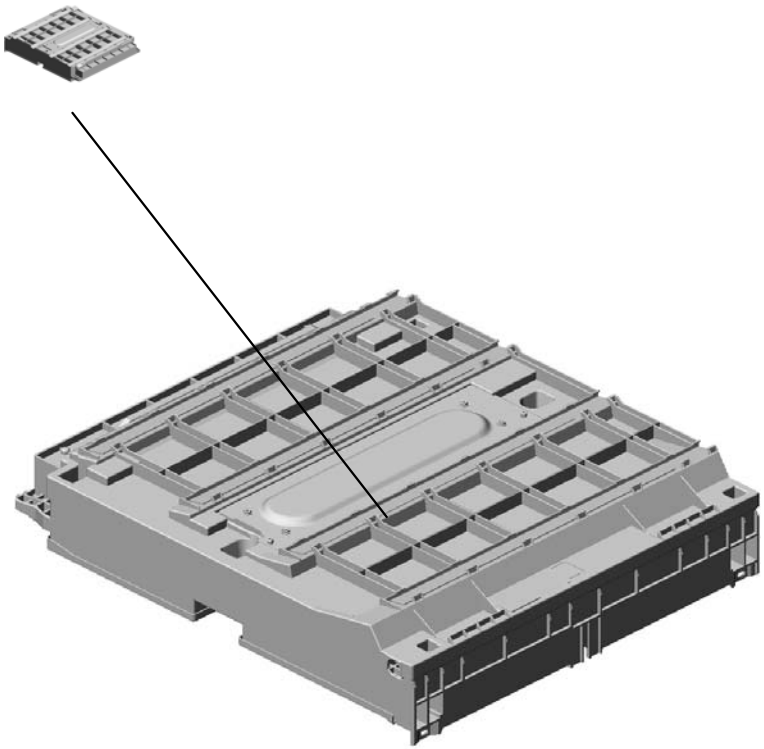

Copyright (c) 2006-2016 Ricoh Company, Ltd. 2016/07/29 Version 1.00

U004
LASER UNIT

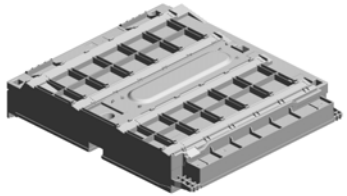

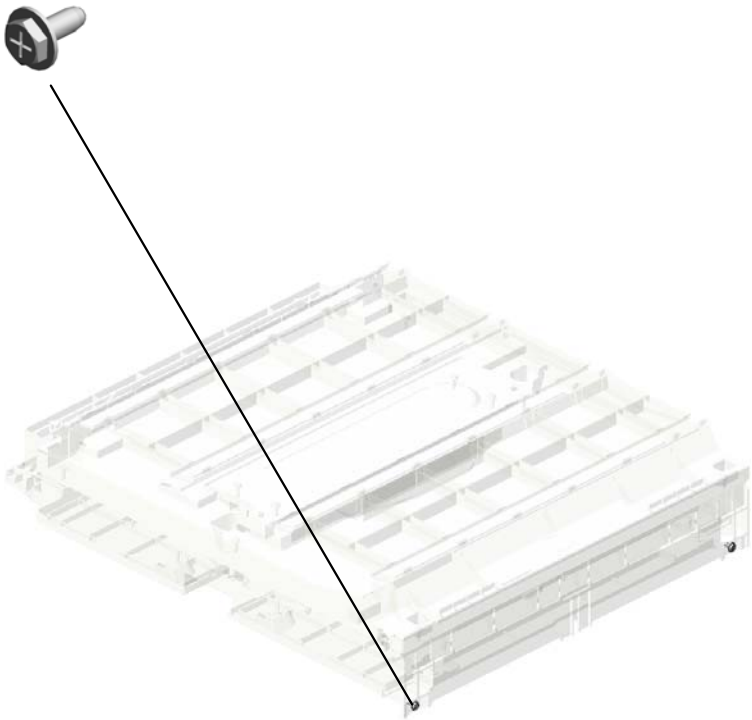

Copyright (c) 2006-2016 Ricoh Company, Ltd. 2016/07/29 Version 1.00

U004_S001
OPTICAL WRITING UNIT

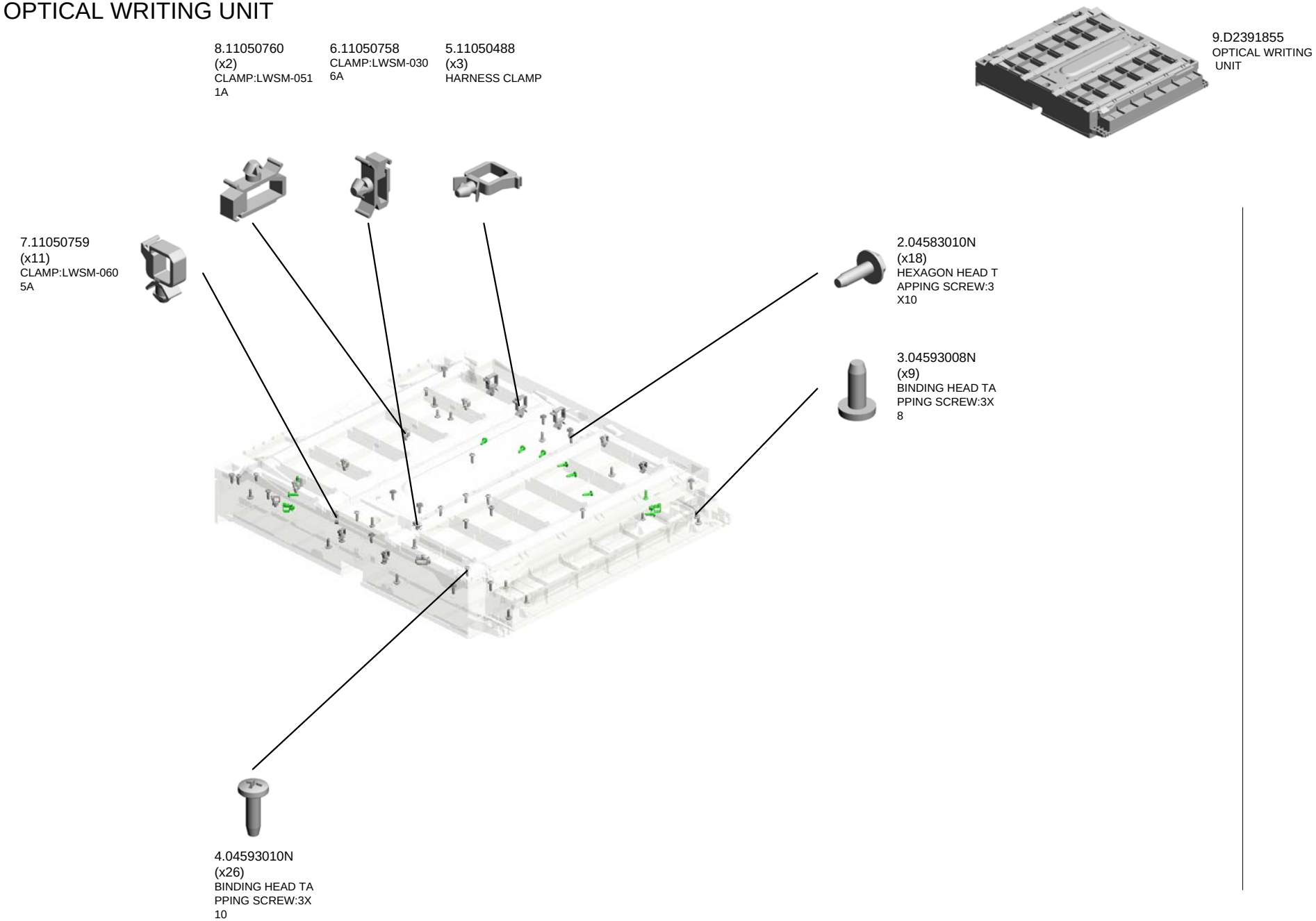

Copyright (c) 2006-2016 Ricoh Company, Ltd. 2016/07/29 Version 1.00

U005.PAPER FEED

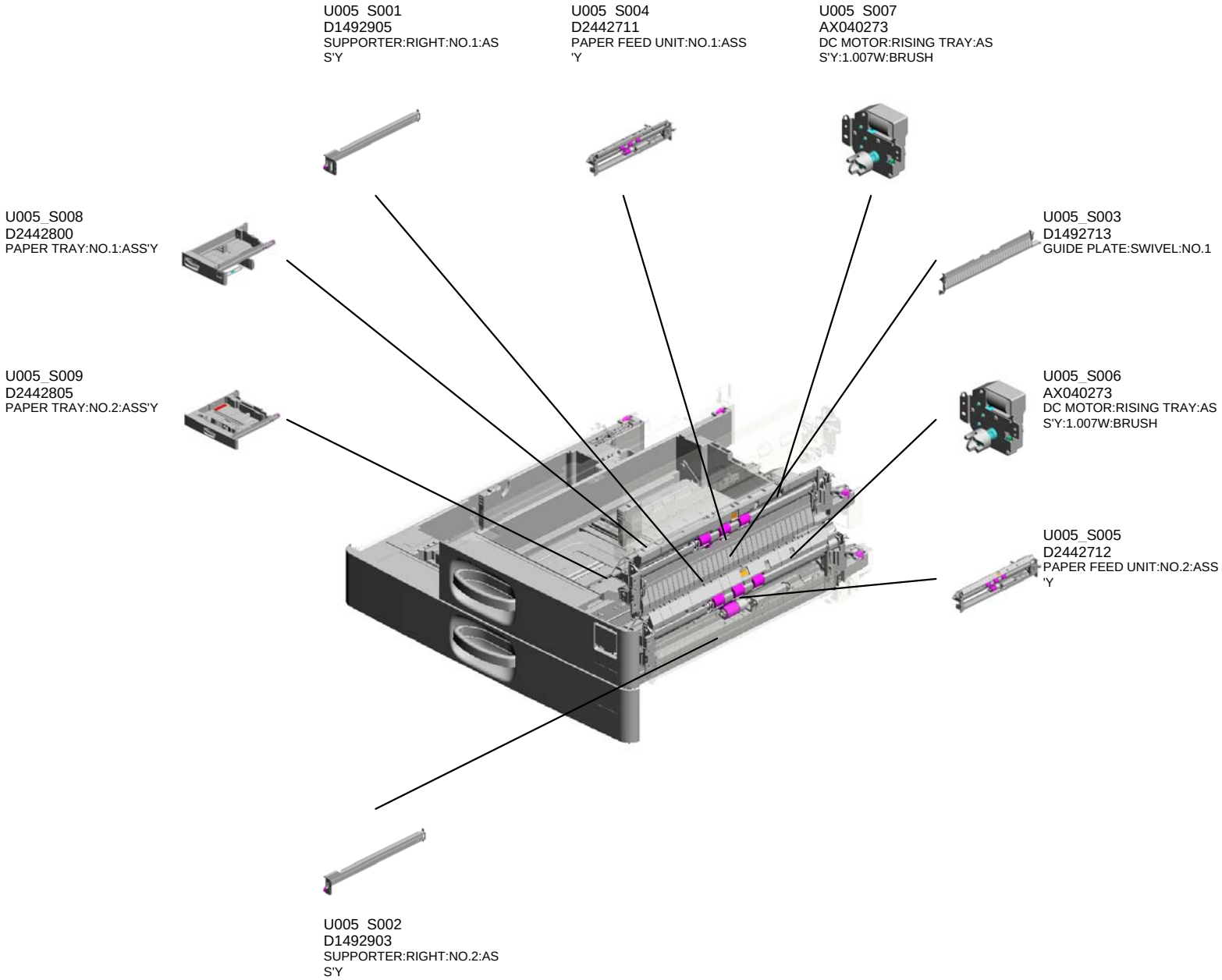

Copyright (c) 2006-2016 Ricoh Company, Ltd. 2016/07/29 Version 1.00

U005_S004.PAPER FEED UNIT:NO.1:ASS'Y

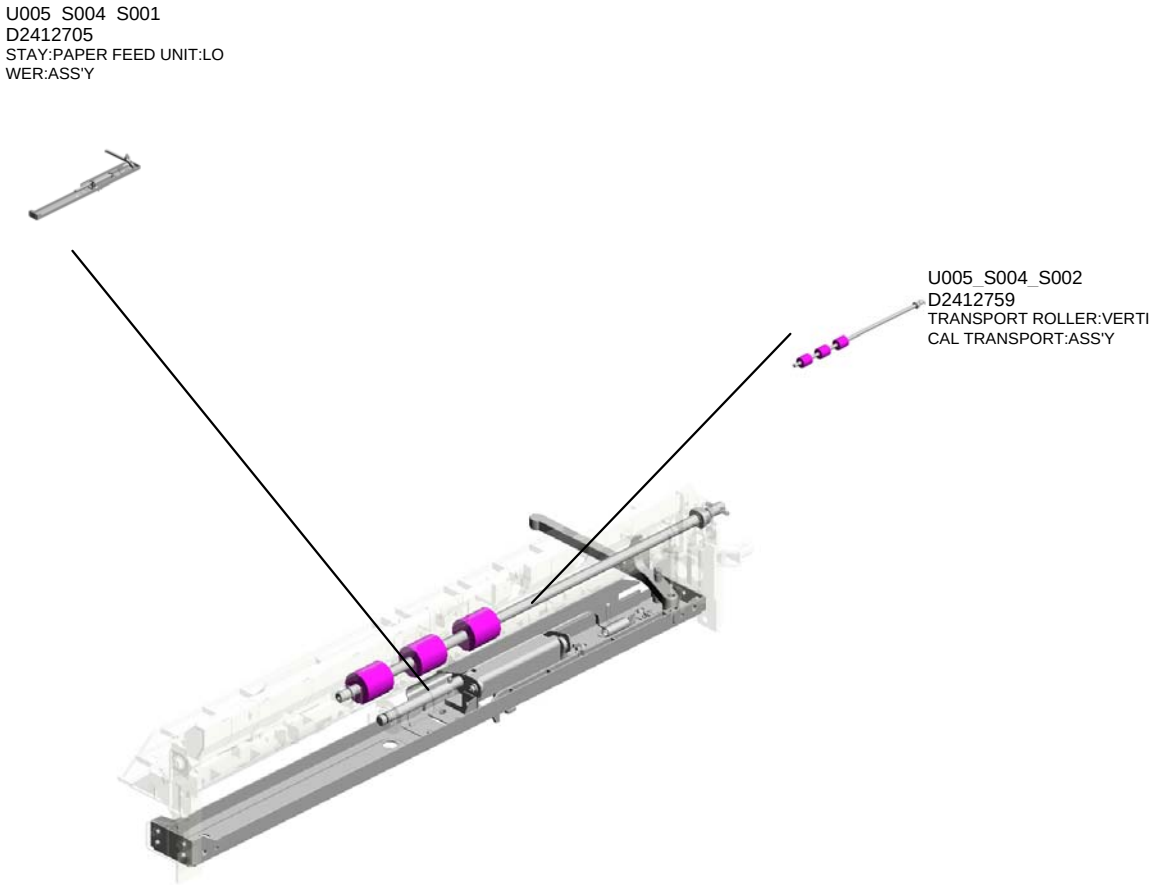

Copyright (c) 2006-2016 Ricoh Company, Ltd. 2016/07/29 Version 1.00

U005_S005.PAPER FEED UNIT:NO.2:ASS'Y

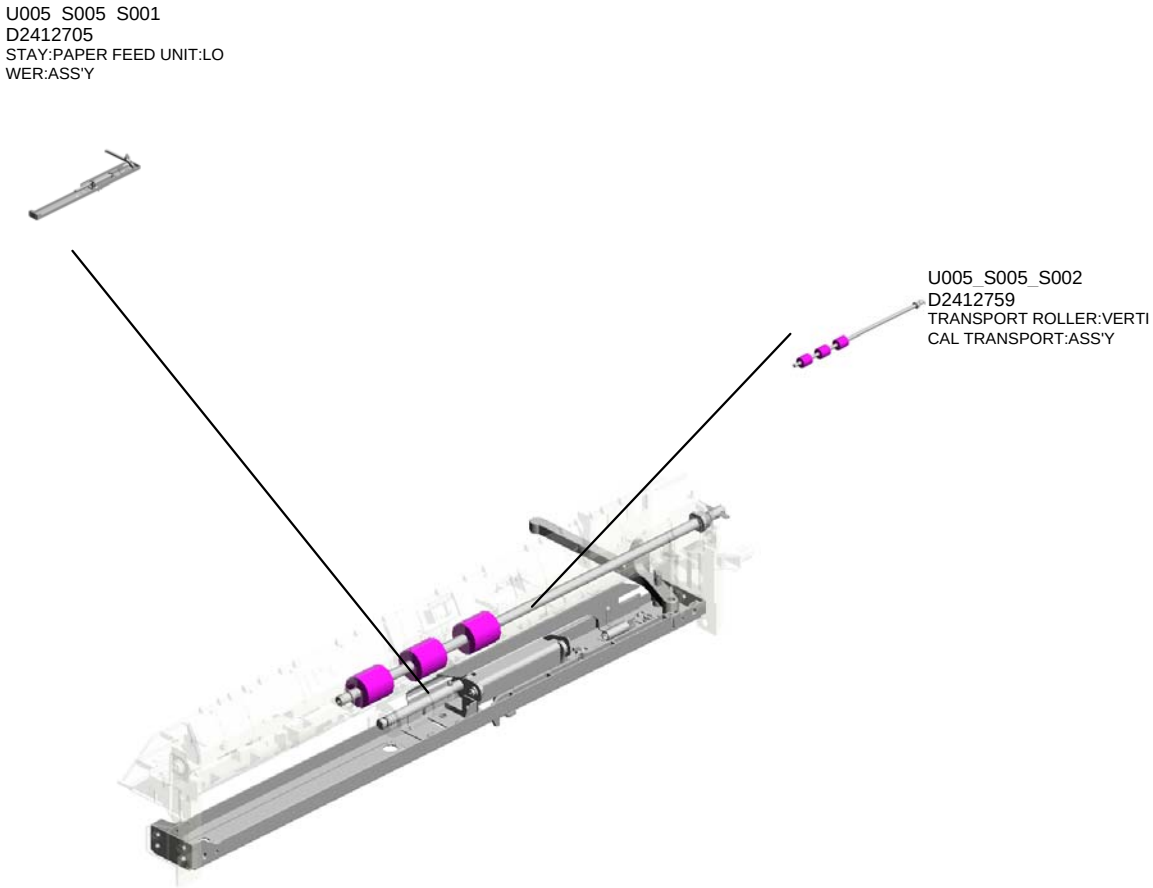

Copyright (c) 2006-2016 Ricoh Company, Ltd. 2016/07/29 Version 1.00

U005_S008.PAPER TRAY:NO.1:ASS'Y

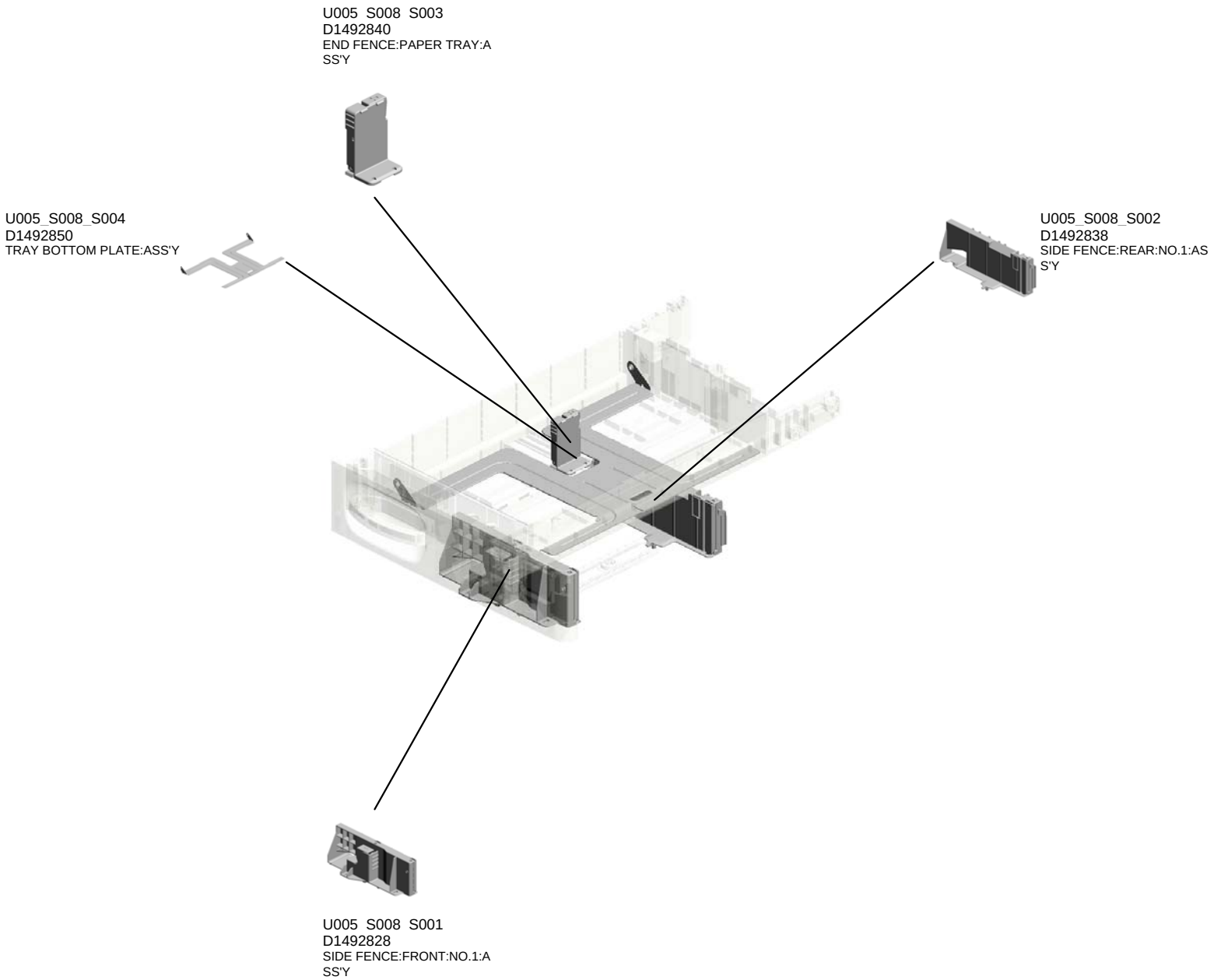

Copyright (c) 2006-2016 Ricoh Company, Ltd. 2016/07/29 Version 1.00

U005_S009.PAPER TRAY:NO.2:ASS'Y

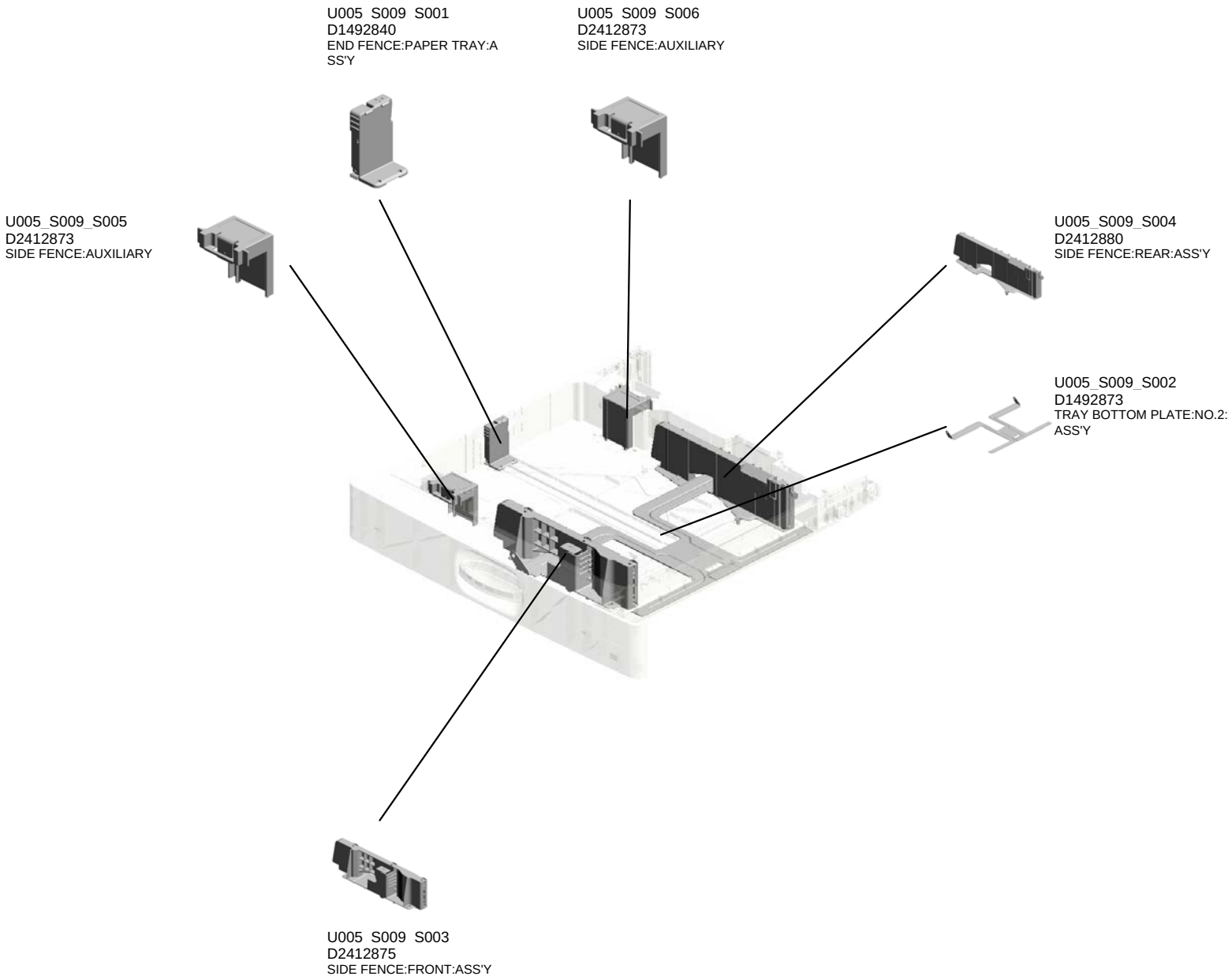

Copyright (c) 2006-2016 Ricoh Company, Ltd. 2016/07/29 Version 1.00

U005
PAPER FEED

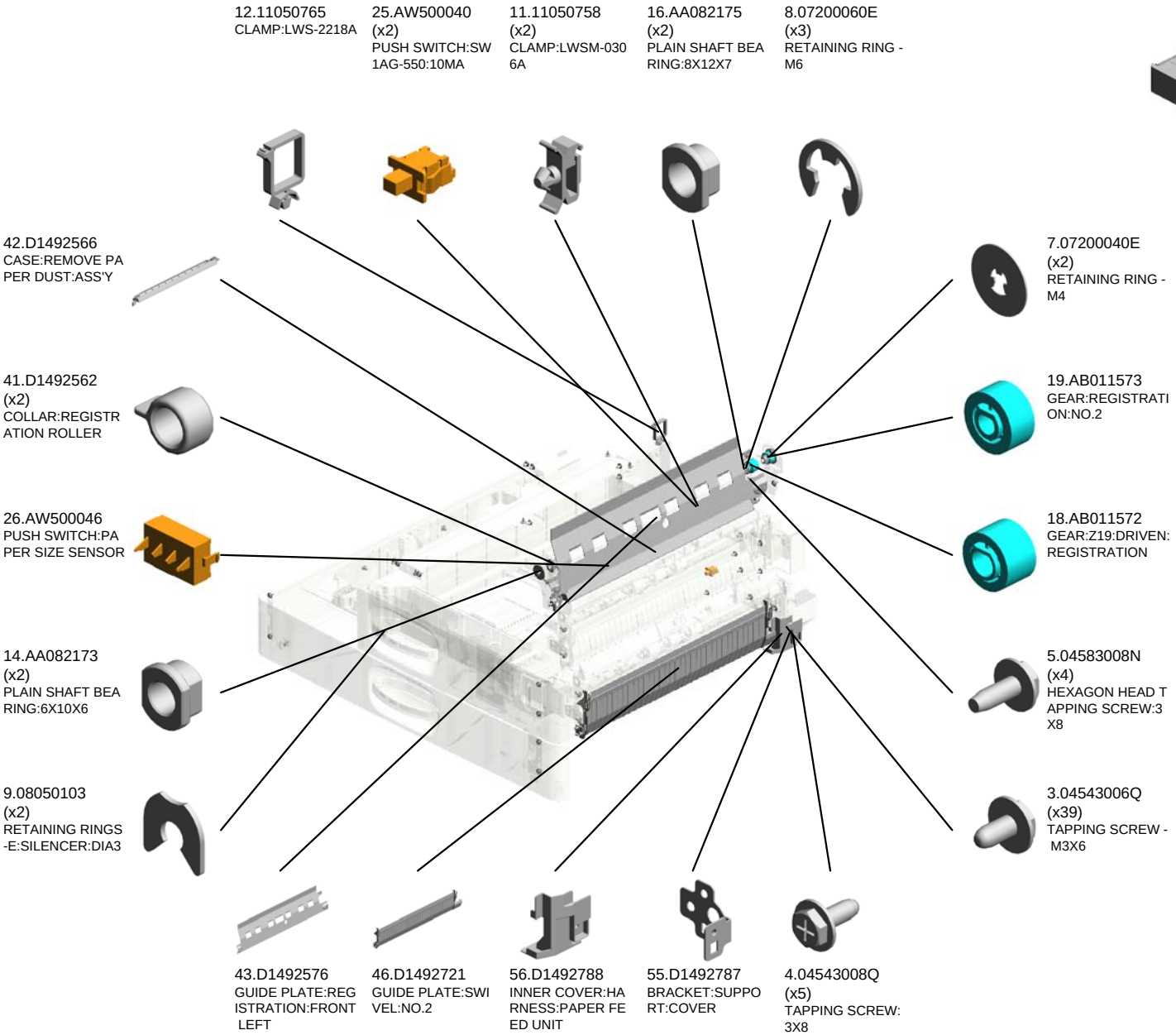

Copyright (c) 2006-2016 Ricoh Company, Ltd. 2016/07/29 Version 1.00

U005
PAPER FEED

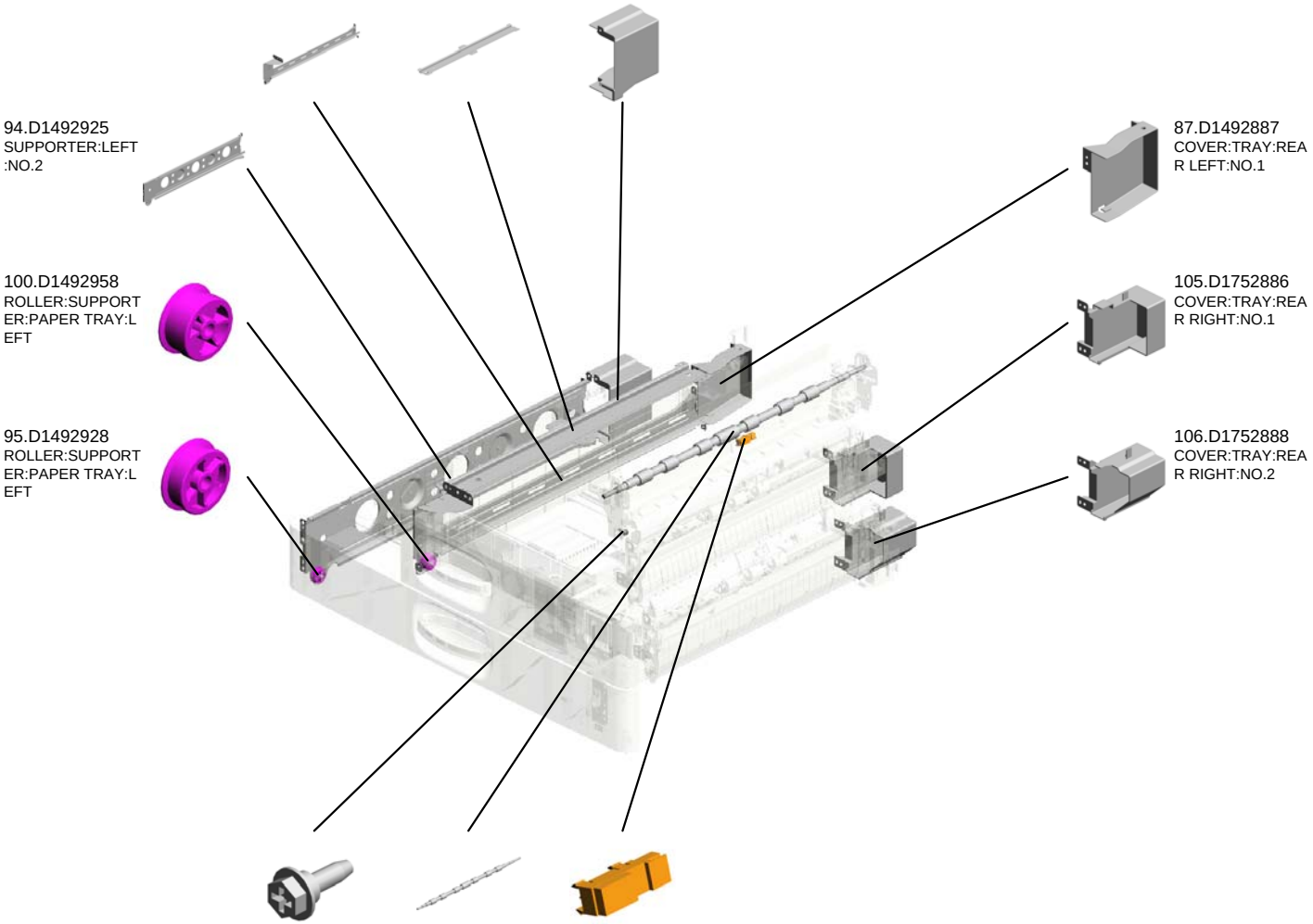

Copyright (c) 2006-2016 Ricoh Company, Ltd. 2016/07/29 Version 1.00

U005_S001
SUPPORTER:RIGHT:NO.1:ASS'Y

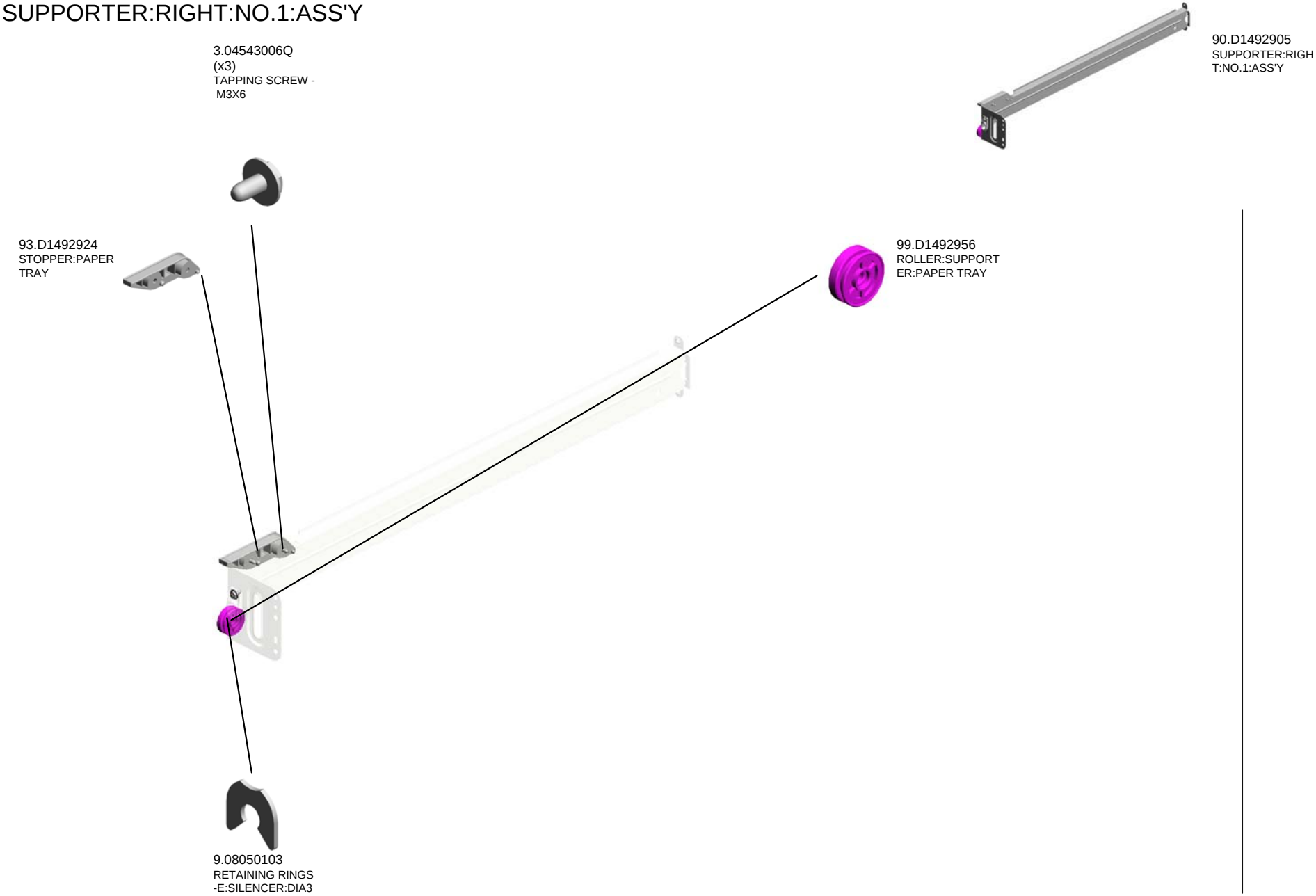

Copyright (c) 2006-2016 Ricoh Company, Ltd. 2016/07/29 Version 1.00

U005_S002
SUPPORTER:RIGHT:NO.2:ASS'Y

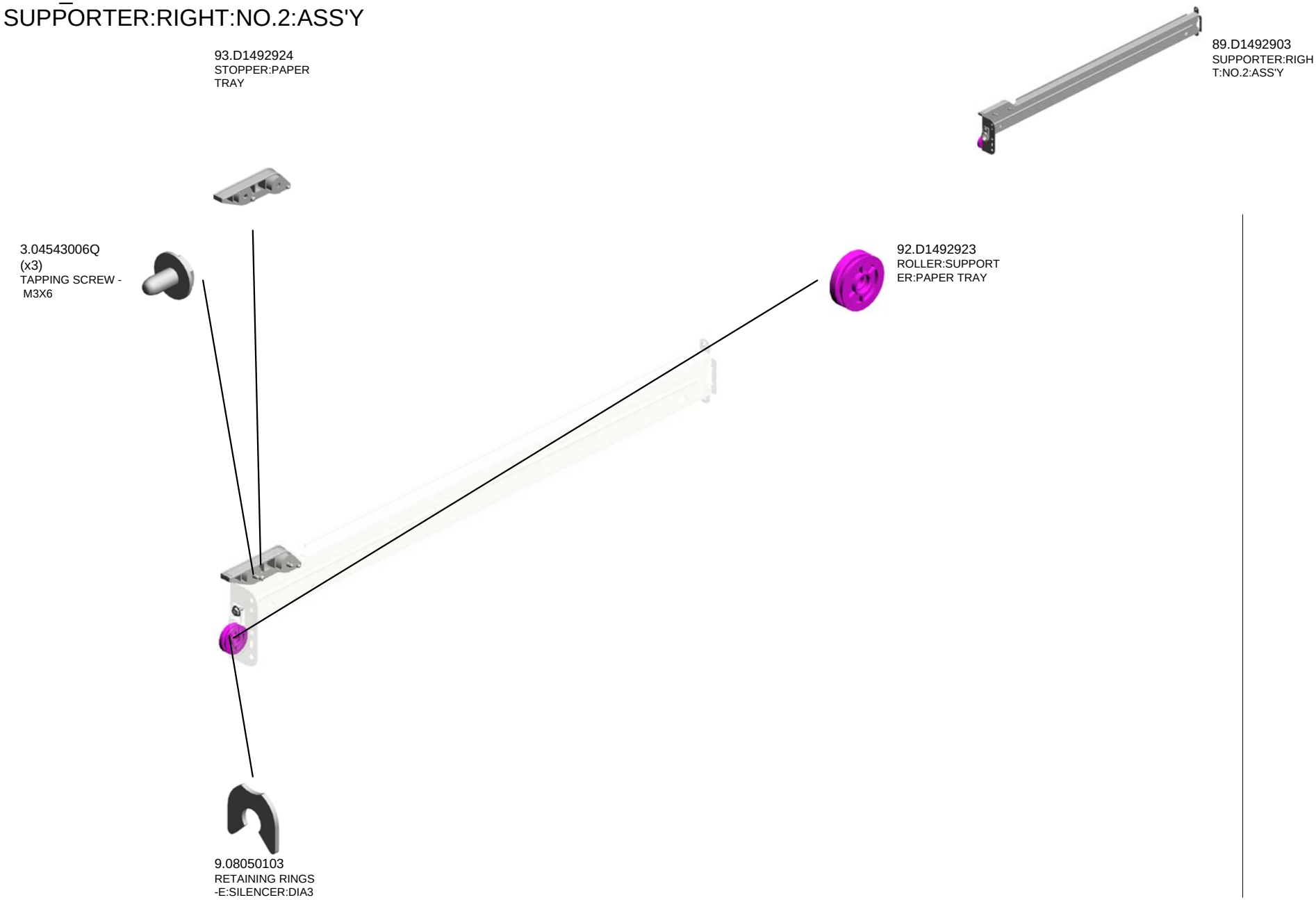

Copyright (c) 2006-2016 Ricoh Company, Ltd. 2016/07/29 Version 1.00

U005_S003
GUIDE PLATE:SWIVEL:NO.1

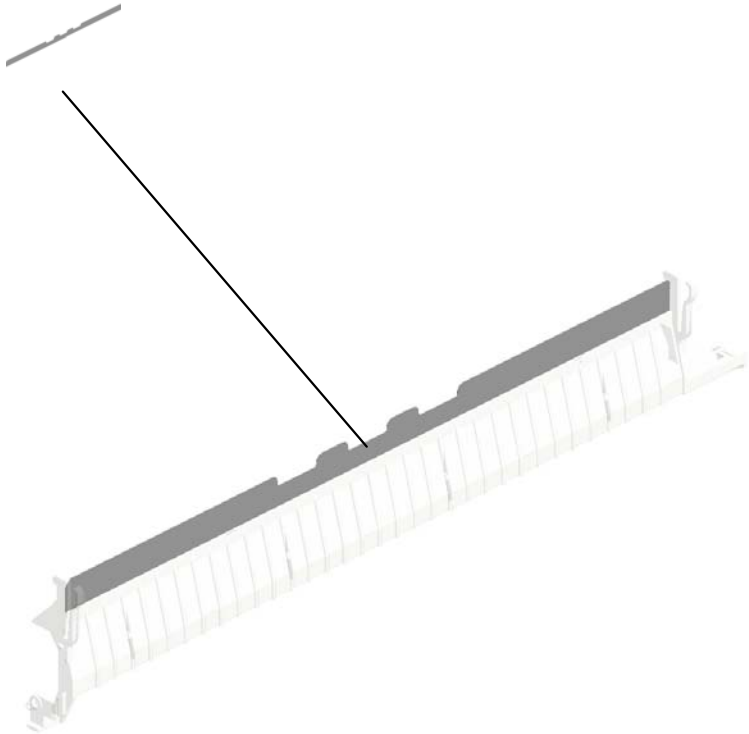

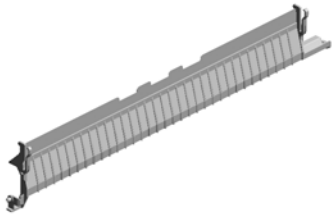

Copyright (c) 2006-2016 Ricoh Company, Ltd. 2016/07/29 Version 1.00

U005_S004
PAPER FEED UNIT:NO.1:ASS'Y

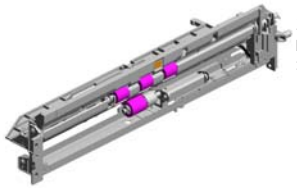

126.D2442711
PAPER FEED UNIT
:NO.1:ASS'Y

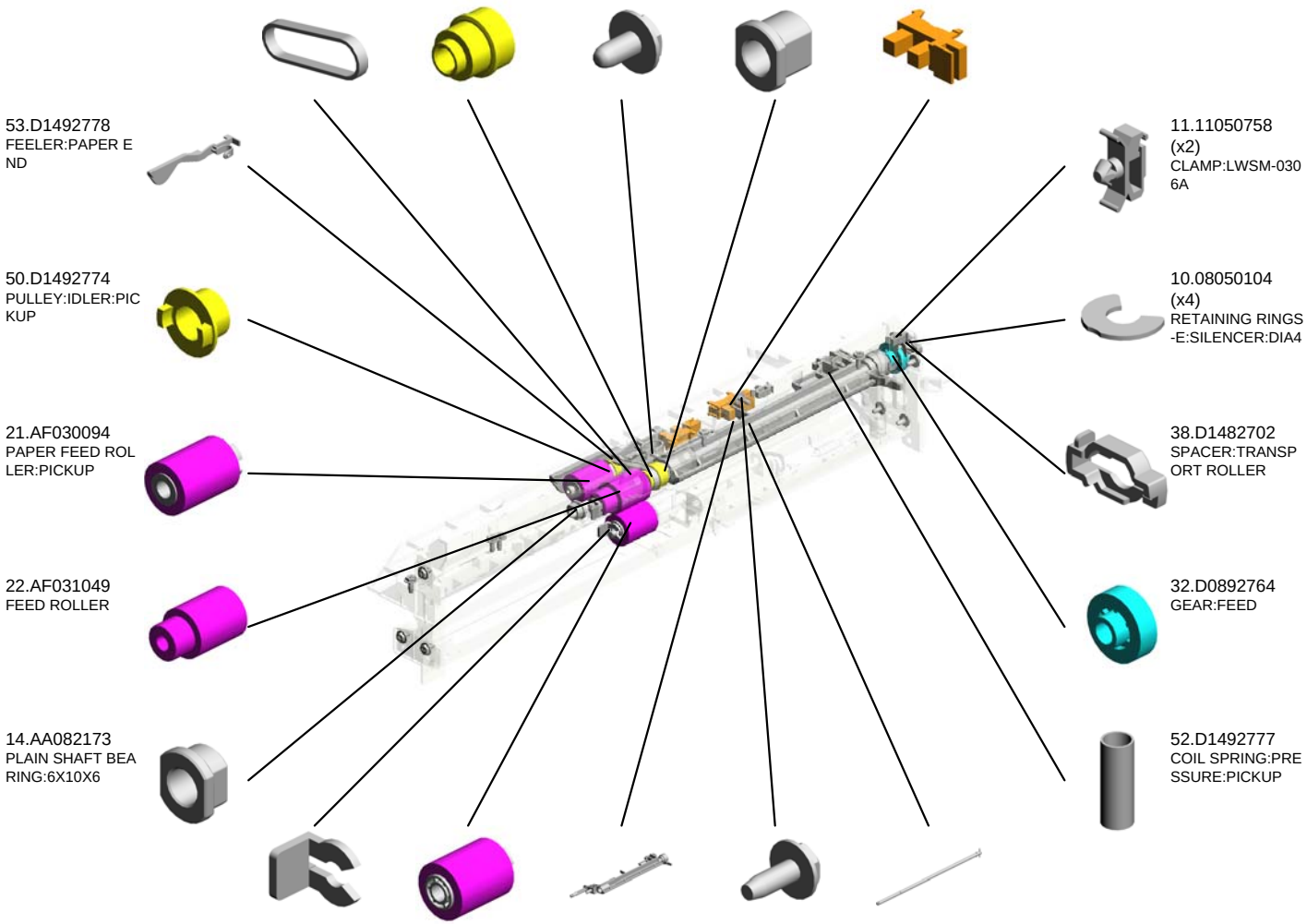

Copyright (c) 2006-2016 Ricoh Company, Ltd. 2016/07/29 Version 1.00

U005_S004
PAPER FEED UNIT:NO.1:ASS'Y

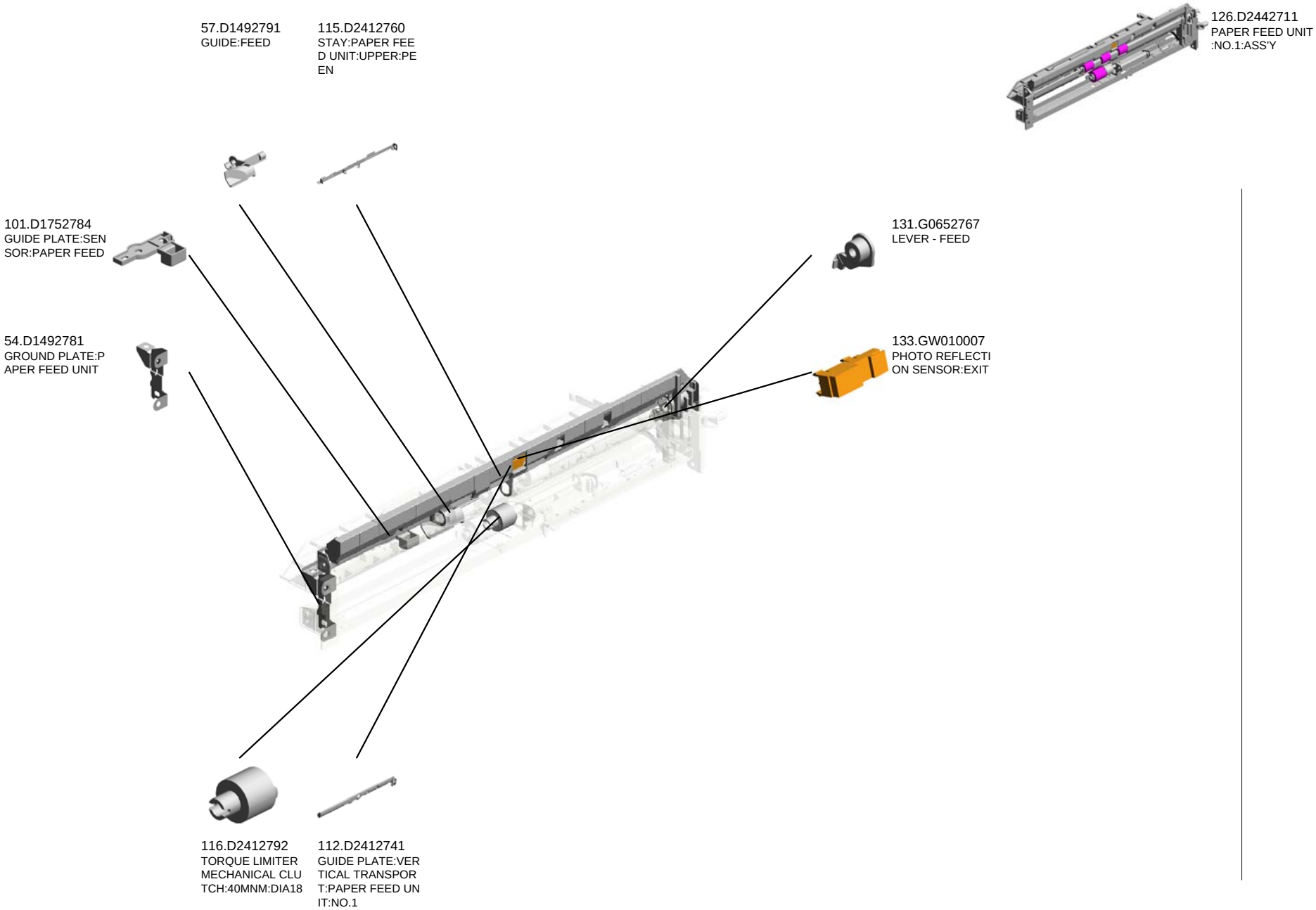

Copyright (c) 2006-2016 Ricoh Company, Ltd. 2016/07/29 Version 1.00

U005_S004_S001
STAY:PAPER FEED UNIT:LOWER:ASS'Y

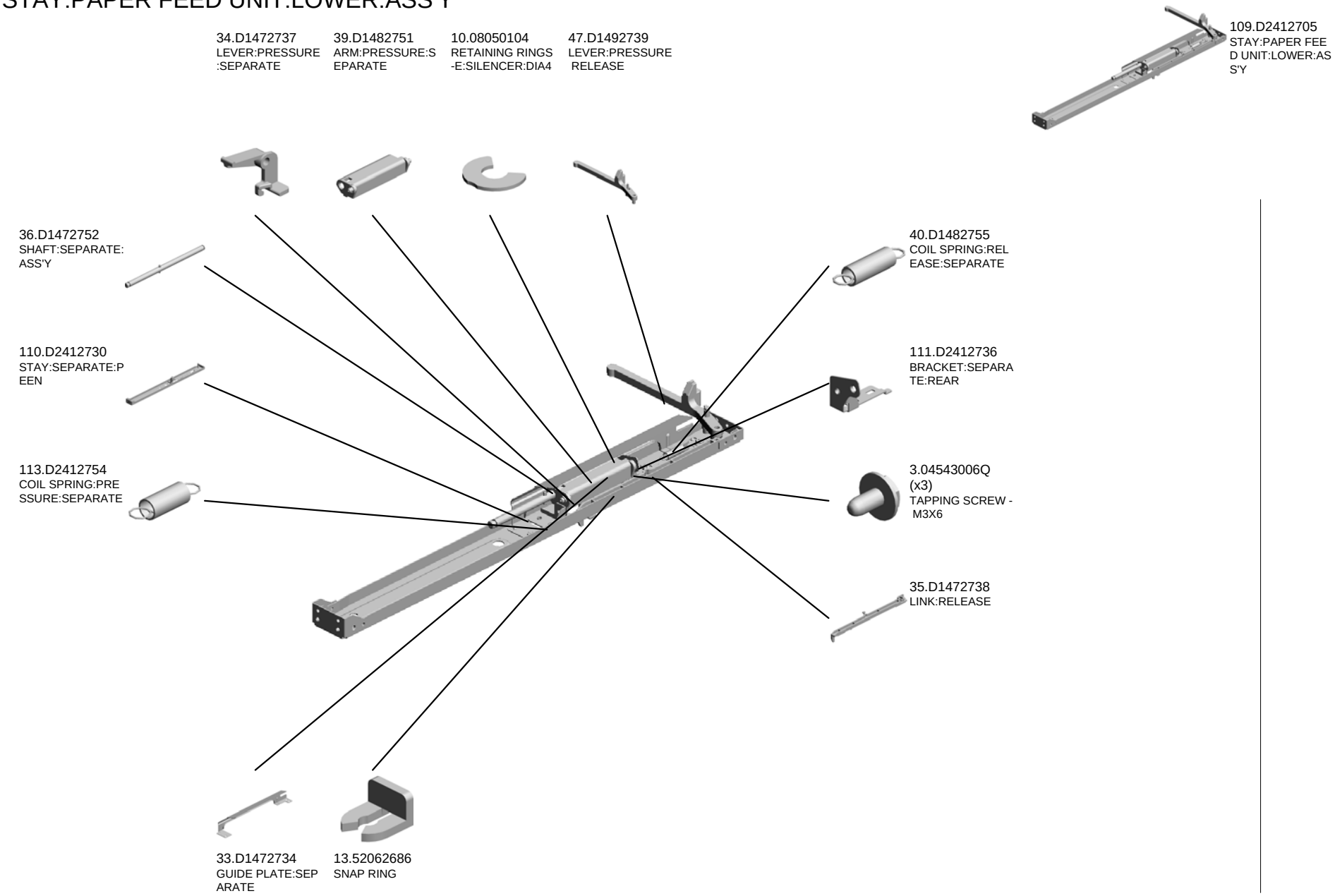

Copyright (c) 2006-2016 Ricoh Company, Ltd. 2016/07/29 Version 1.00

U005_S004_S002
TRANSPORT ROLLER:VERTICAL TRANSPORT:ASS'Y

14.AA082173
PLAIN SHAFT BEA
RING:6X10X6

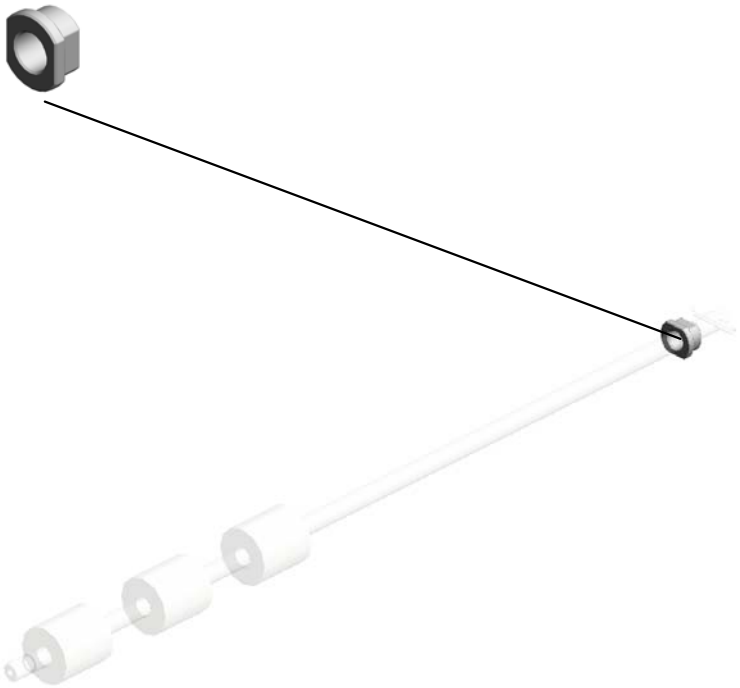

114.D2412759
TRANSPORT ROLL
ER:VERTICAL TRA
NSPORT:ASS'Y

Copyright (c) 2006-2016 Ricoh Company, Ltd. 2016/07/29 Version 1.00

U005_S005
PAPER FEED UNIT:NO.2:ASS'Y

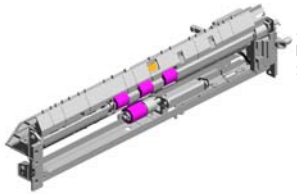

127.D2442712
PAPER FEED UNIT :NO.2:ASS'Y

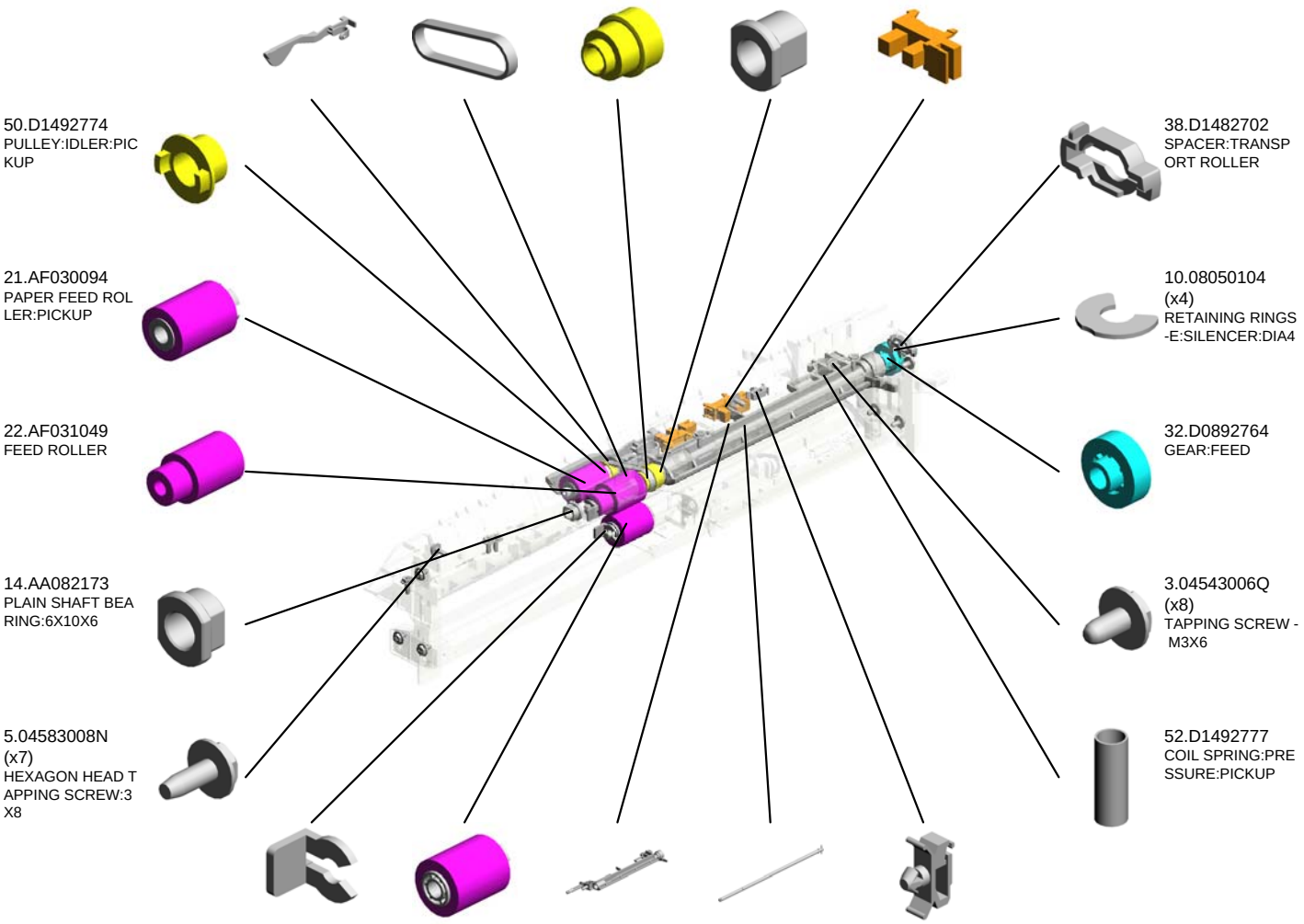

Copyright (c) 2006-2016 Ricoh Company, Ltd. 2016/07/29 Version 1.00

U005_S005
PAPER FEED UNIT:NO.2:ASS'Y

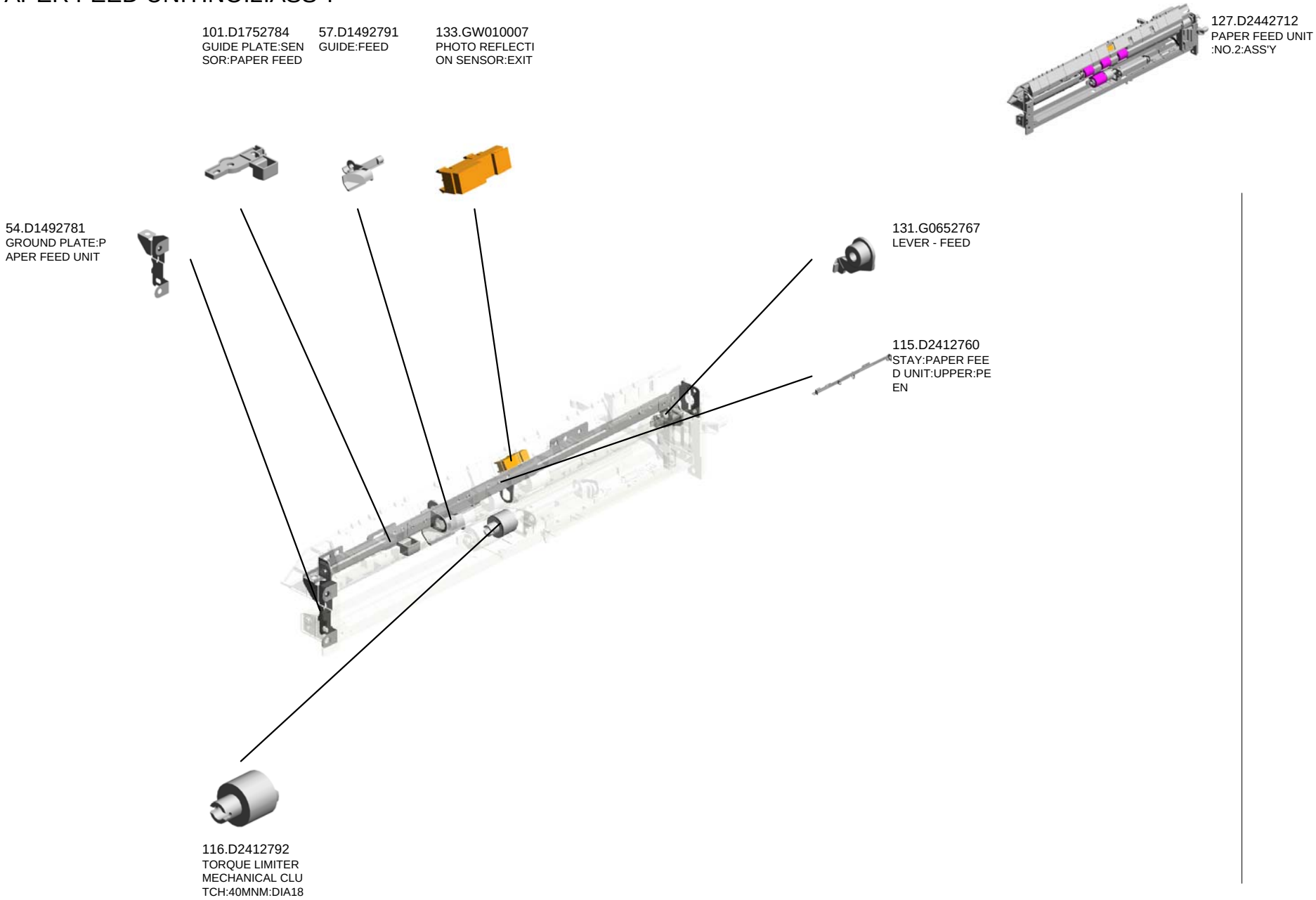

Copyright (c) 2006-2016 Ricoh Company, Ltd. 2016/07/29 Version 1.00

U005_S005_S001
STAY:PAPER FEED UNIT:LOWER:ASS'Y

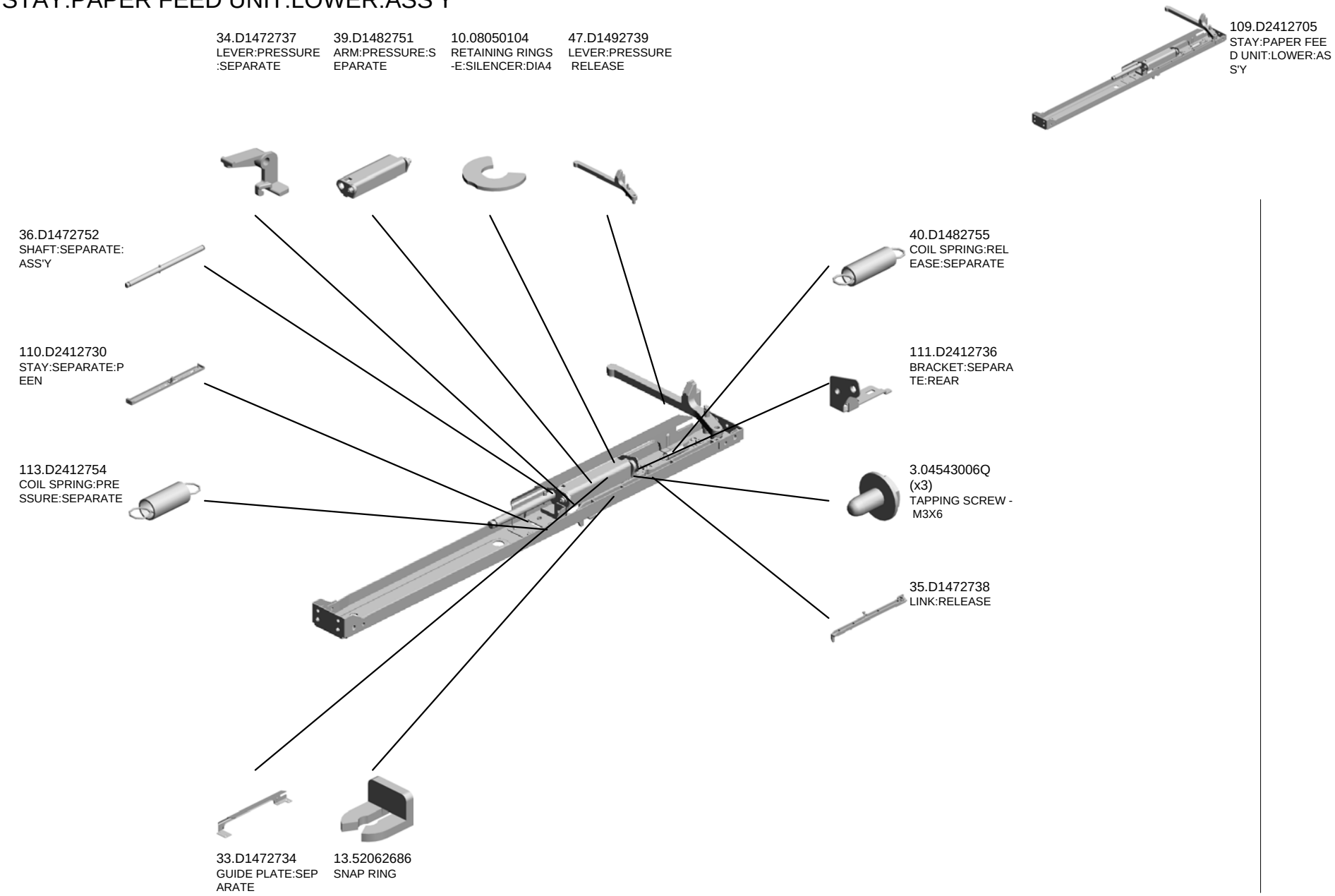

Copyright (c) 2006-2016 Ricoh Company, Ltd. 2016/07/29 Version 1.00

U005_S005_S002
TRANSPORT ROLLER:VERTICAL TRANSPORT:ASS'Y

14.AA082173
PLAIN SHAFT BEA
RING:6X10X6

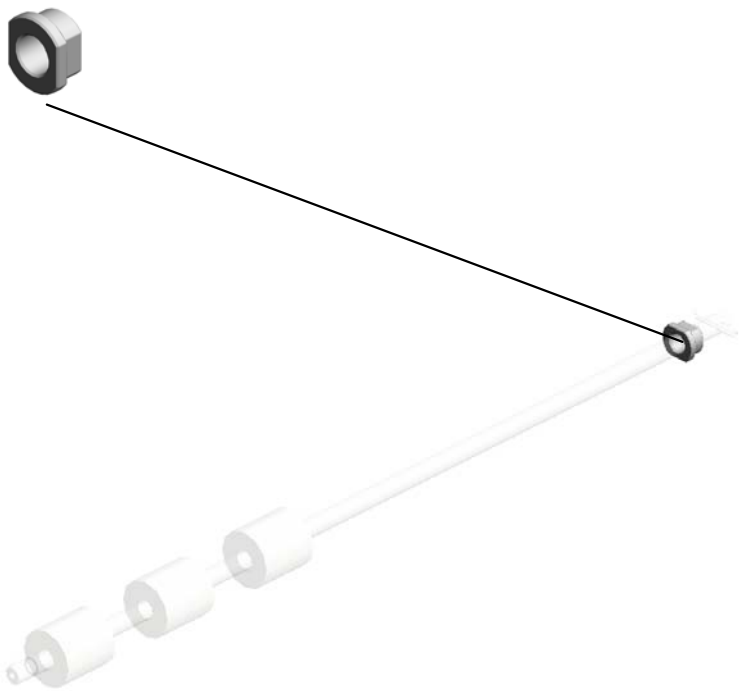

114.D2412759
TRANSPORT ROLL
ER:VERTICAL TRA
NSPORT:ASS'Y

Copyright (c) 2006-2016 Ricoh Company, Ltd. 2016/07/29 Version 1.00

U005_S006
DC MOTOR:RISING TRAY:ASS'Y:1.007W:BRUSH

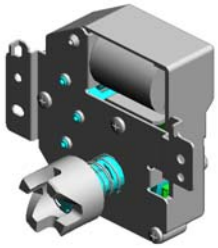

27.AX040273
DC MOTOR:RISING
TRAY:ASS'Y:1.007
W:BRUSH

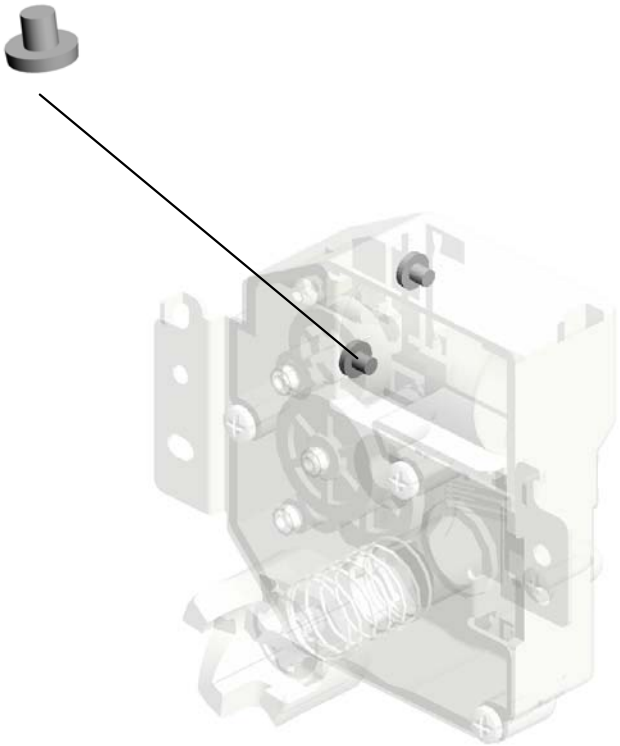

Copyright (c) 2006-2016 Ricoh Company, Ltd. 2016/07/29 Version 1.00

U005_S007
DC MOTOR:RISING TRAY:ASS'Y:1.007W:BRUSH

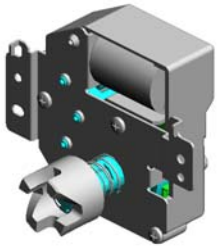

27.AX040273
DC MOTOR:RISING
TRAY:ASS'Y:1.007
W:BRUSH

1.03530030N
(x2)
SCREW:M3X3

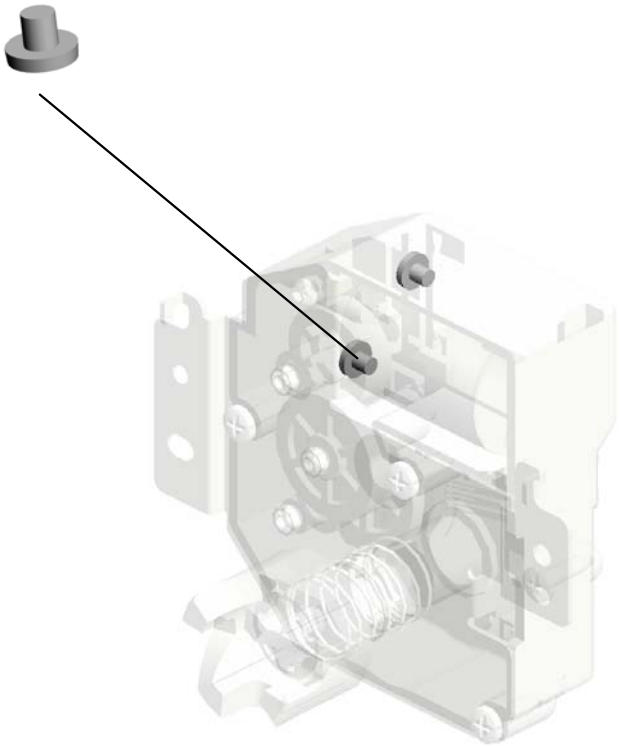

Copyright (c) 2006-2016 Ricoh Company, Ltd. 2016/07/29 Version 1.00

U005_S008
PAPER TRAY:NO.1:ASS'Y

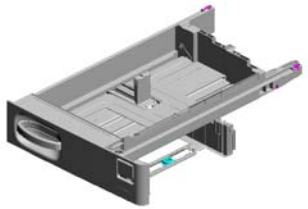

128.D2442800
PAPER TRAY:NO.1
:ASS'Y

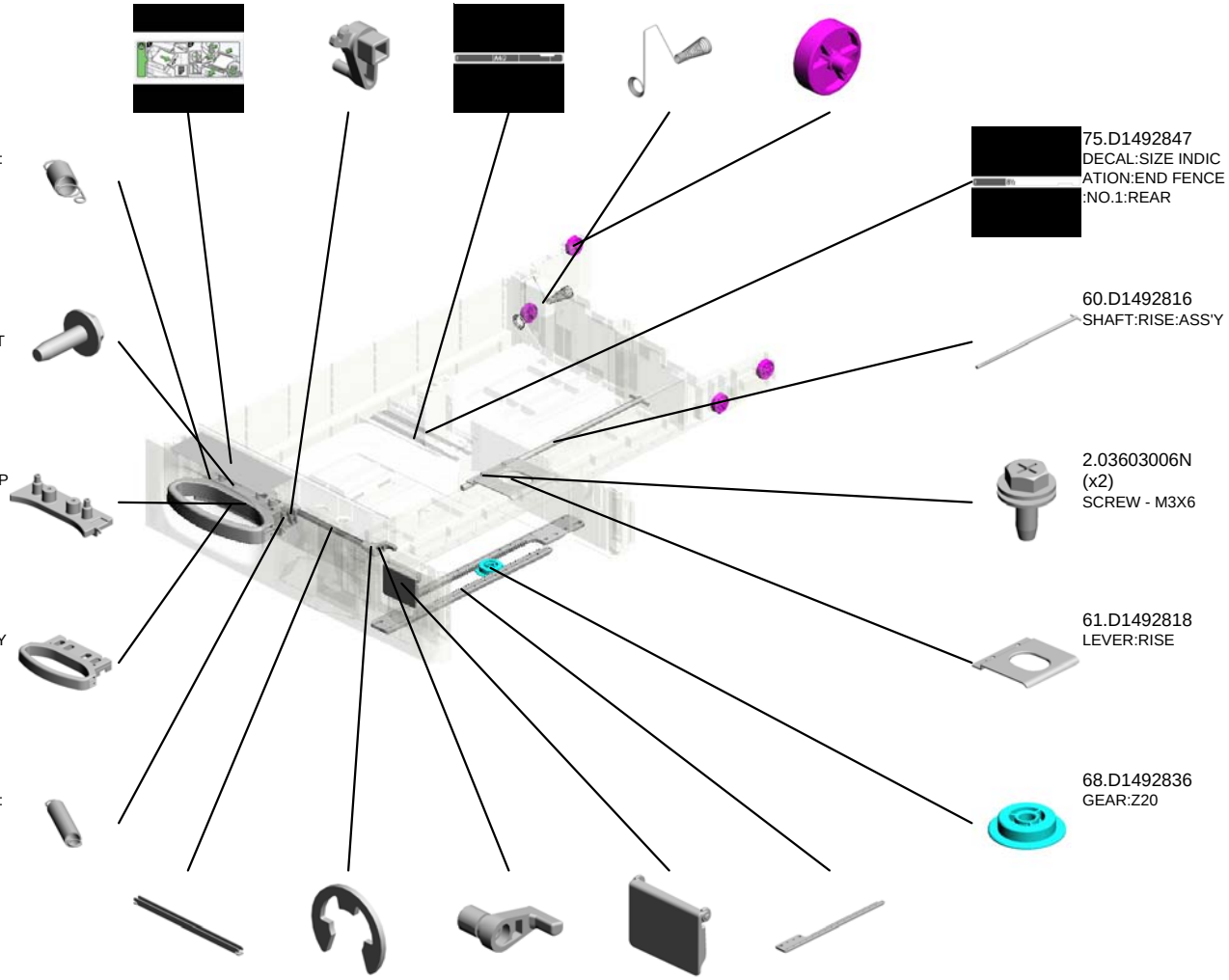

6.04583010N (x 3)
HEXAGON HEAD TAPPING SCREW:3X
10

Copyright (c) 2006-2016 Ricoh Company, Ltd. 2016/07/29 Version 1.00

U005_S008
PAPER TRAY:NO.1:ASS'Y

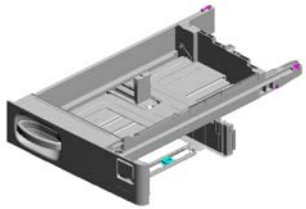

128.D2442800
PAPER TRAY:NO.1
:ASS'Y

118.D2412865
COVER:PAPER TR
AY:NO.1

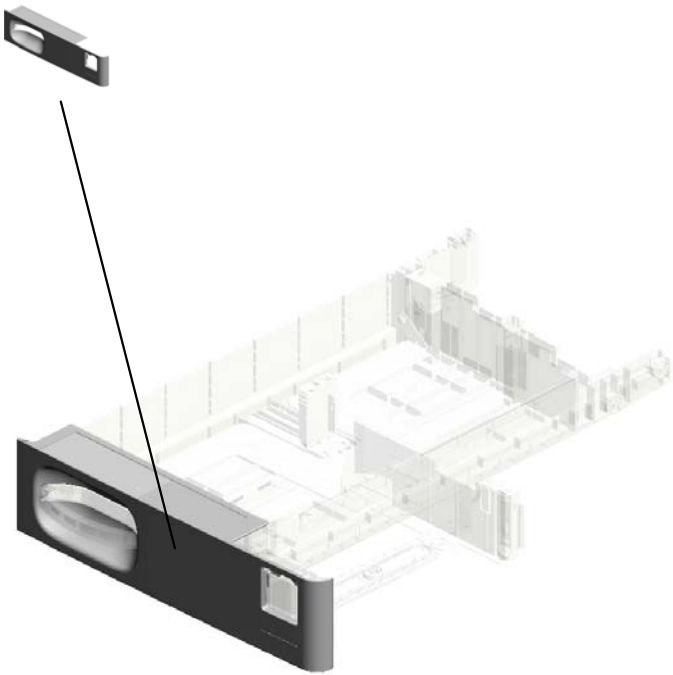

Copyright (c) 2006-2016 Ricoh Company, Ltd. 2016/07/29 Version 1.00

U005_S008_S001
SIDE FENCE:FRONT:NO.1:ASS'Y

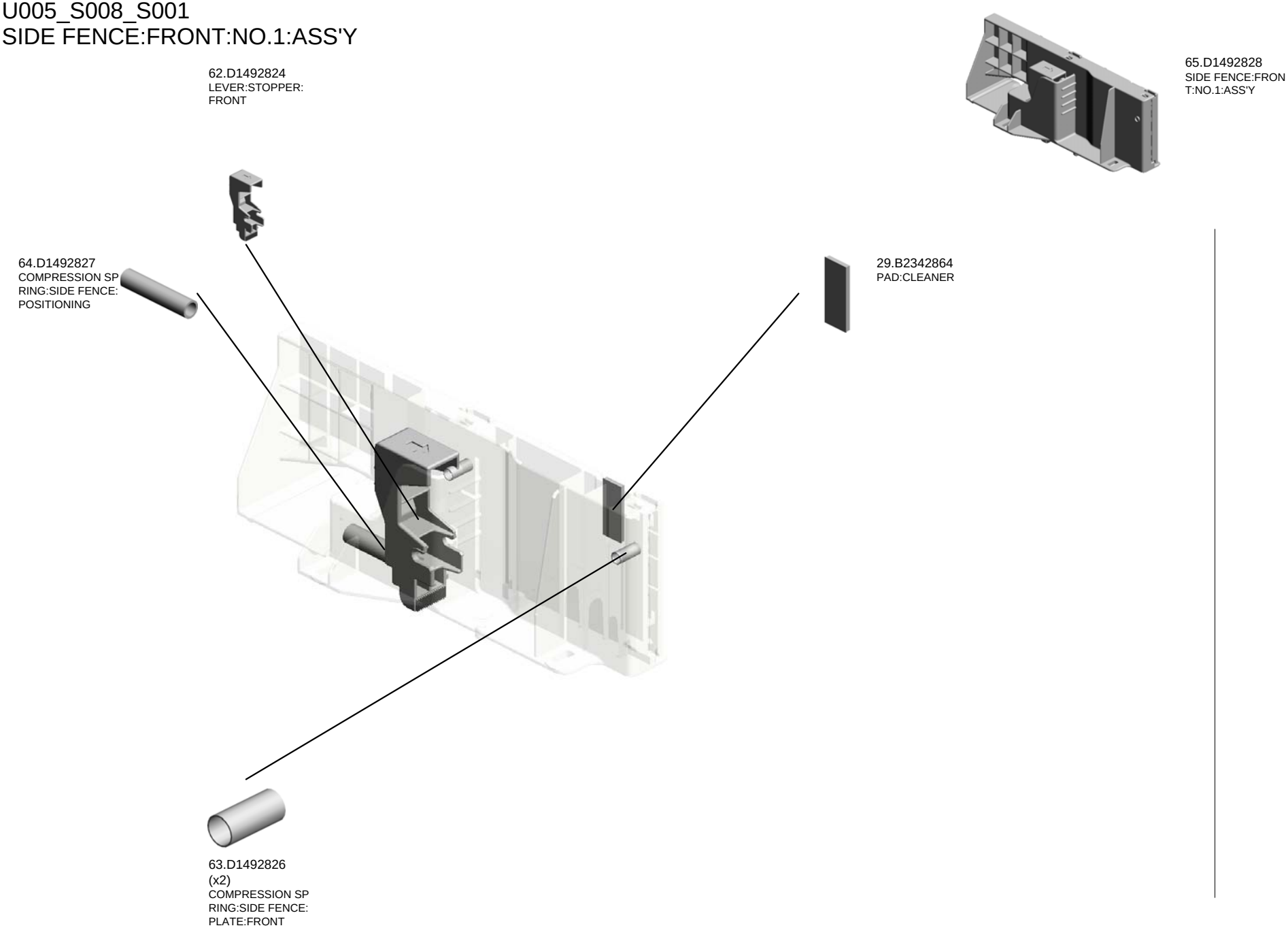

Copyright (c) 2006-2016 Ricoh Company, Ltd. 2016/07/29 Version 1.00

U005_S008_S002
SIDE FENCE:REAR:NO.1:ASS'Y

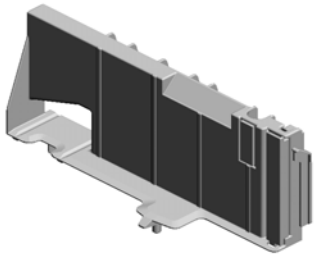

69.D1492838
SIDE FENCE:REAR
:NO.1:ASS'Y

97.D1492952
DECAL:SIDE FENC
E:PAPER VOLUME

29.B2342864
PAD:CLEANER

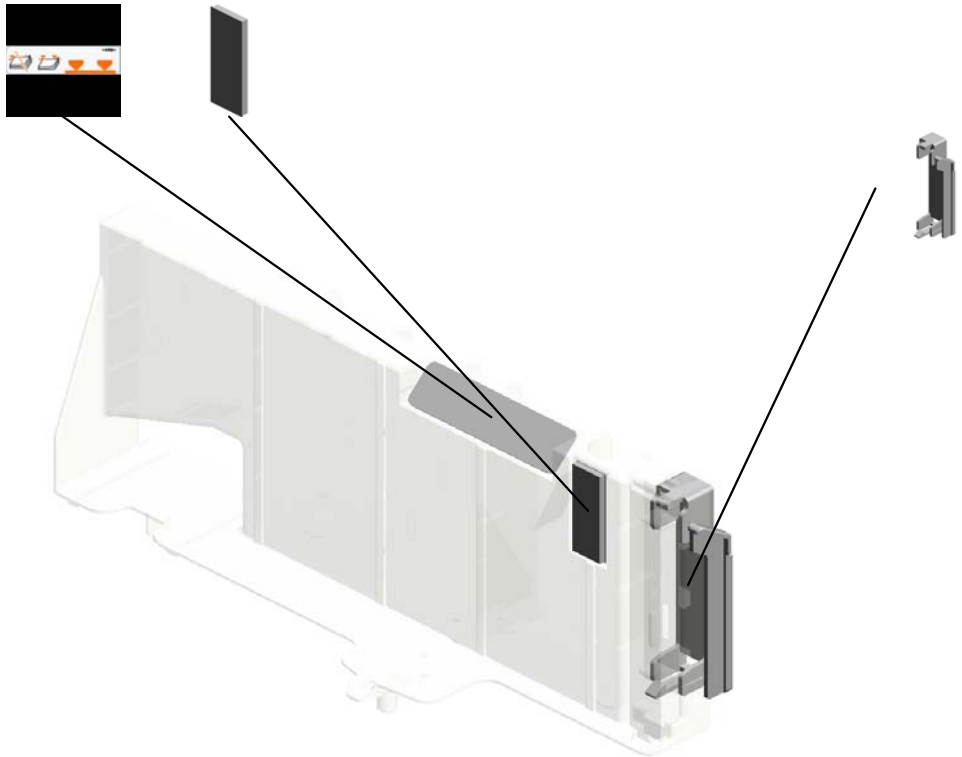

66.D1492834
GUIDE:FEELER:PA
PER END

Copyright (c) 2006-2016 Ricoh Company, Ltd. 2016/07/29 Version 1.00

U005_S008_S003
END FENCE:PAPER TRAY:ASS'Y

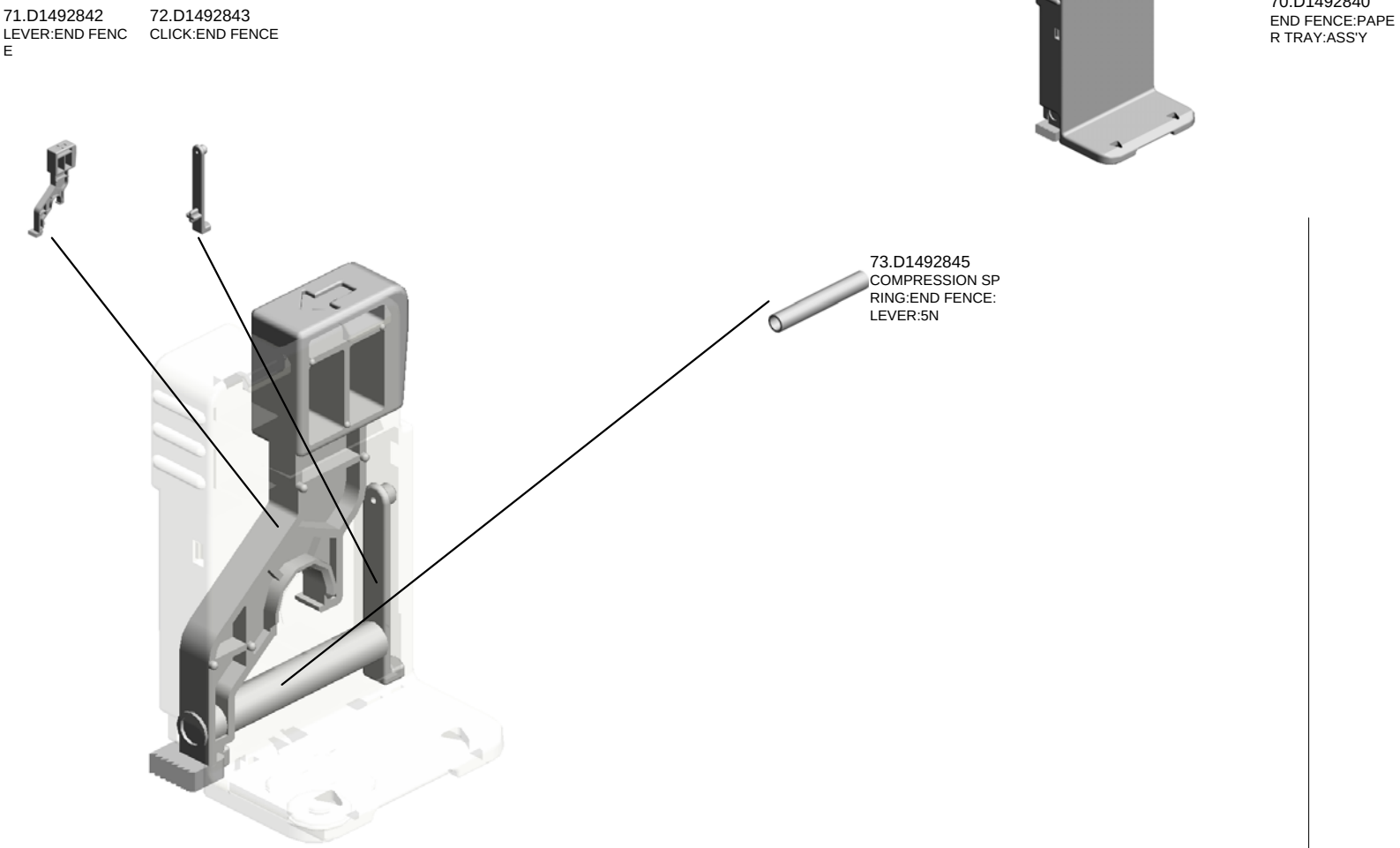

Copyright (c) 2006-2016 Ricoh Company, Ltd. 2016/07/29 Version 1.00

U005_S008_S004
TRAY BOTTOM PLATE:ASS'Y

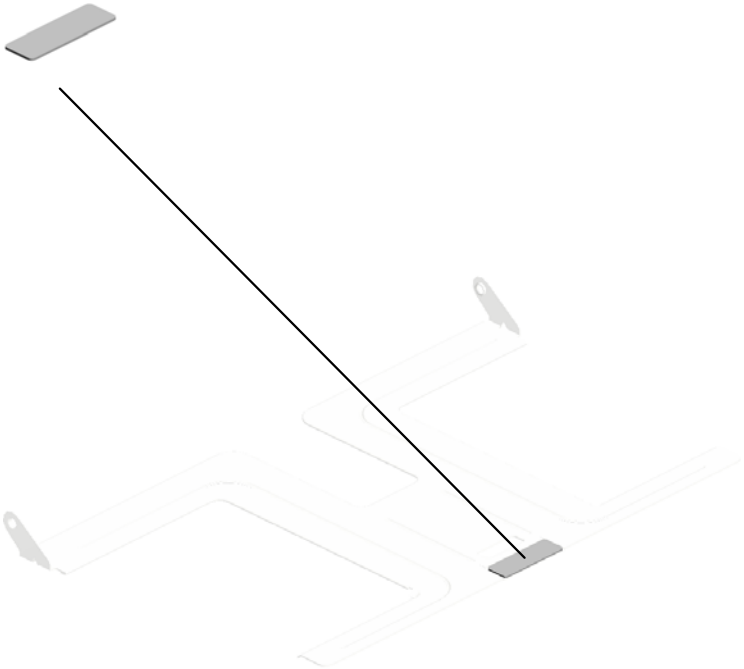

Copyright (c) 2006-2016 Ricoh Company, Ltd. 2016/07/29 Version 1.00

U005_S009
PAPER TRAY:NO.2:ASS'Y

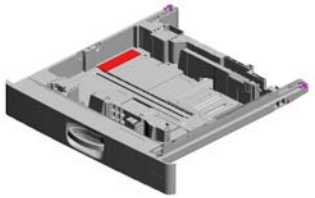

129.D2442805
PAPER TRAY:NO.2
:ASS'Y

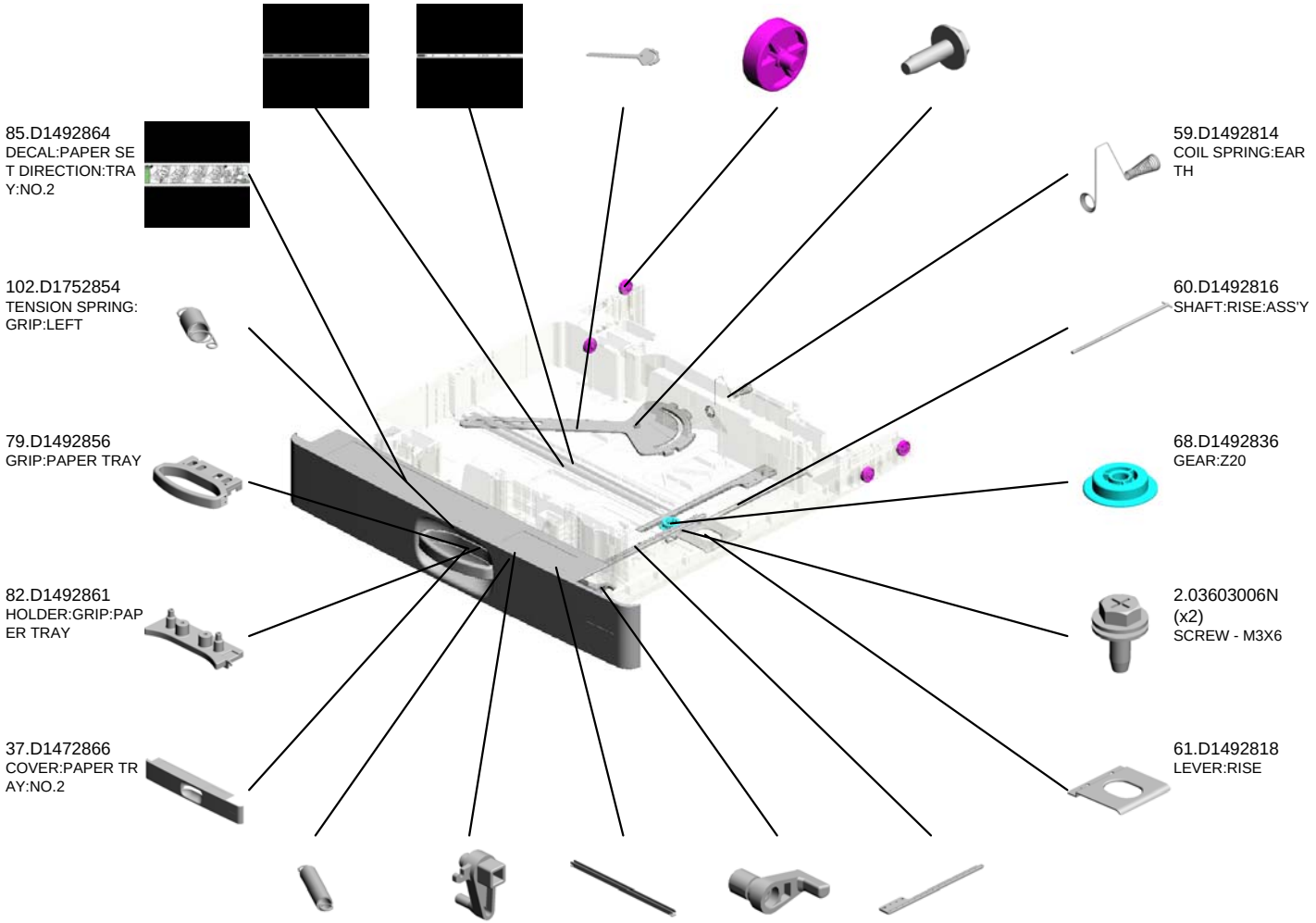

6.04583010N (x 1)
HEXAGON HEAD TAPPING SCREW:3X
10
8.07200060E (x 1)
RETAINING RING - M6

Copyright (c) 2006-2016 Ricoh Company, Ltd. 2016/07/29 Version 1.00

U005_S009
PAPER TRAY:NO.2:ASS'Y

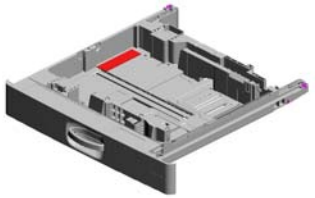

129.D2442805
PAPER TRAY:NO.2
:ASS'Y

117.D2412837
DECAL:SET:SIDE F
ENCE:AUXILIARY

124.D2412884
DECAL:SIZE INDIC
ATION:SIDE FENC
E:AUXILIARY:REAR

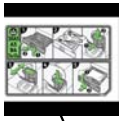

123.D2412883
DECAL:SIZE INDIC
ATION:SIDE FENC
E:AUXILIARY:FRO
NT

119.D2412869
DECAL:SIZE INDIC
ATION:SIDE FENC
E:NO.2

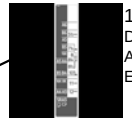

130.D6932867
SUPPORTING PLA
TE:COVER:FRONT:
PAPER TRAY

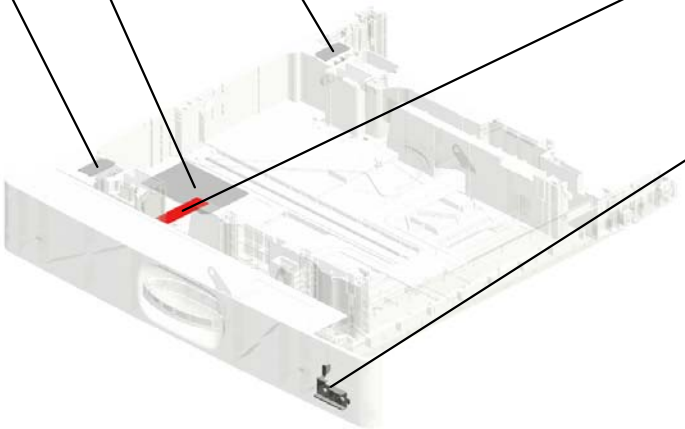

Copyright (c) 2006-2016 Ricoh Company, Ltd. 2016/07/29 Version 1.00

U005_S009_S001
END FENCE:PAPER TRAY:ASS'Y

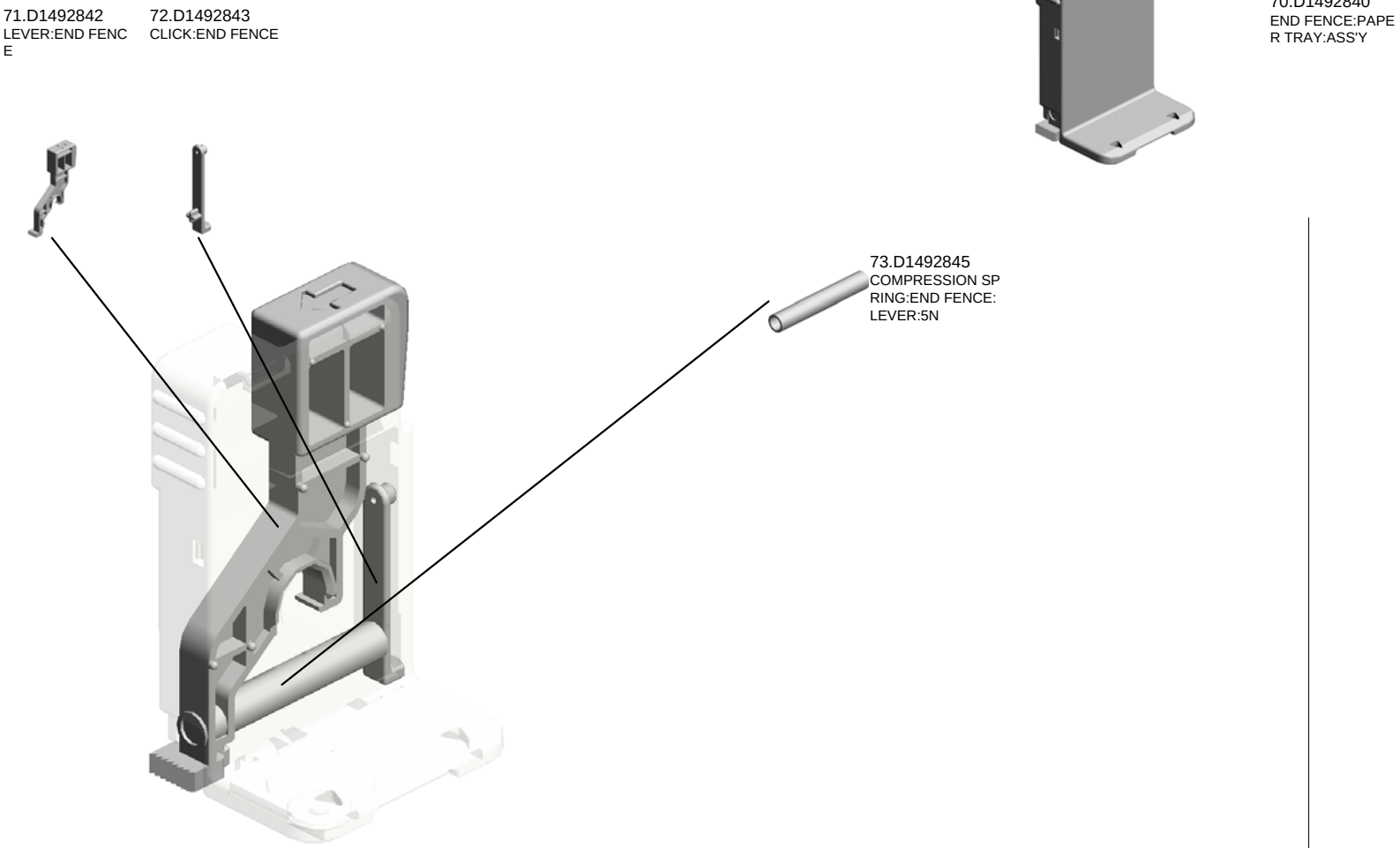

Copyright (c) 2006-2016 Ricoh Company, Ltd. 2016/07/29 Version 1.00

U005_S009_S002
TRAY BOTTOM PLATE:NO.2:ASS'Y

86.D1492873
TRAY BOTTOM PL
ATE:NO.2:ASS'Y

20.AF013006
BOTTOM PLATE P
AD

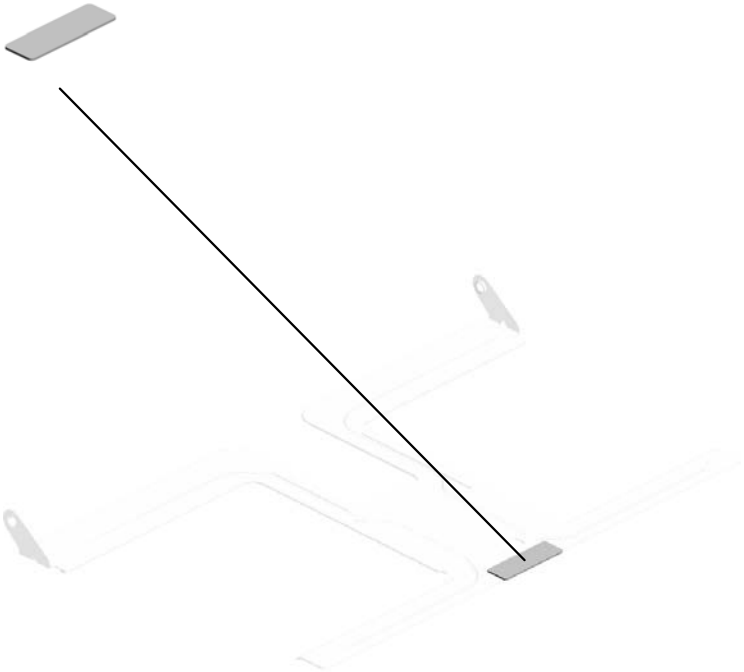

Copyright (c) 2006-2016 Ricoh Company, Ltd. 2016/07/29 Version 1.00

U005_S009_S003
SIDE FENCE:FRONT:ASS'Y

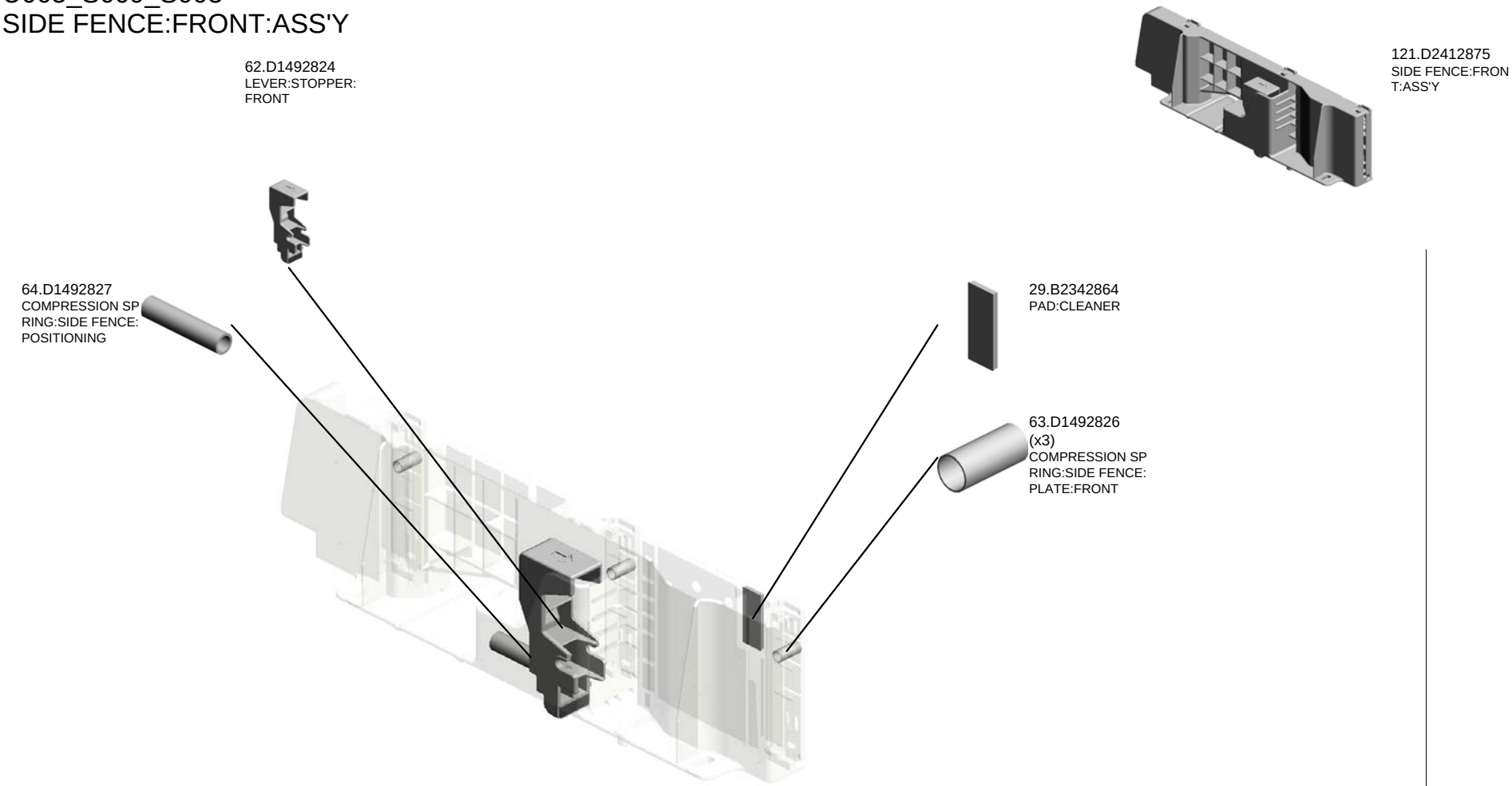

Copyright (c) 2006-2016 Ricoh Company, Ltd. 2016/07/29 Version 1.00

U005_S009_S004
SIDE FENCE:REAR:ASS'Y

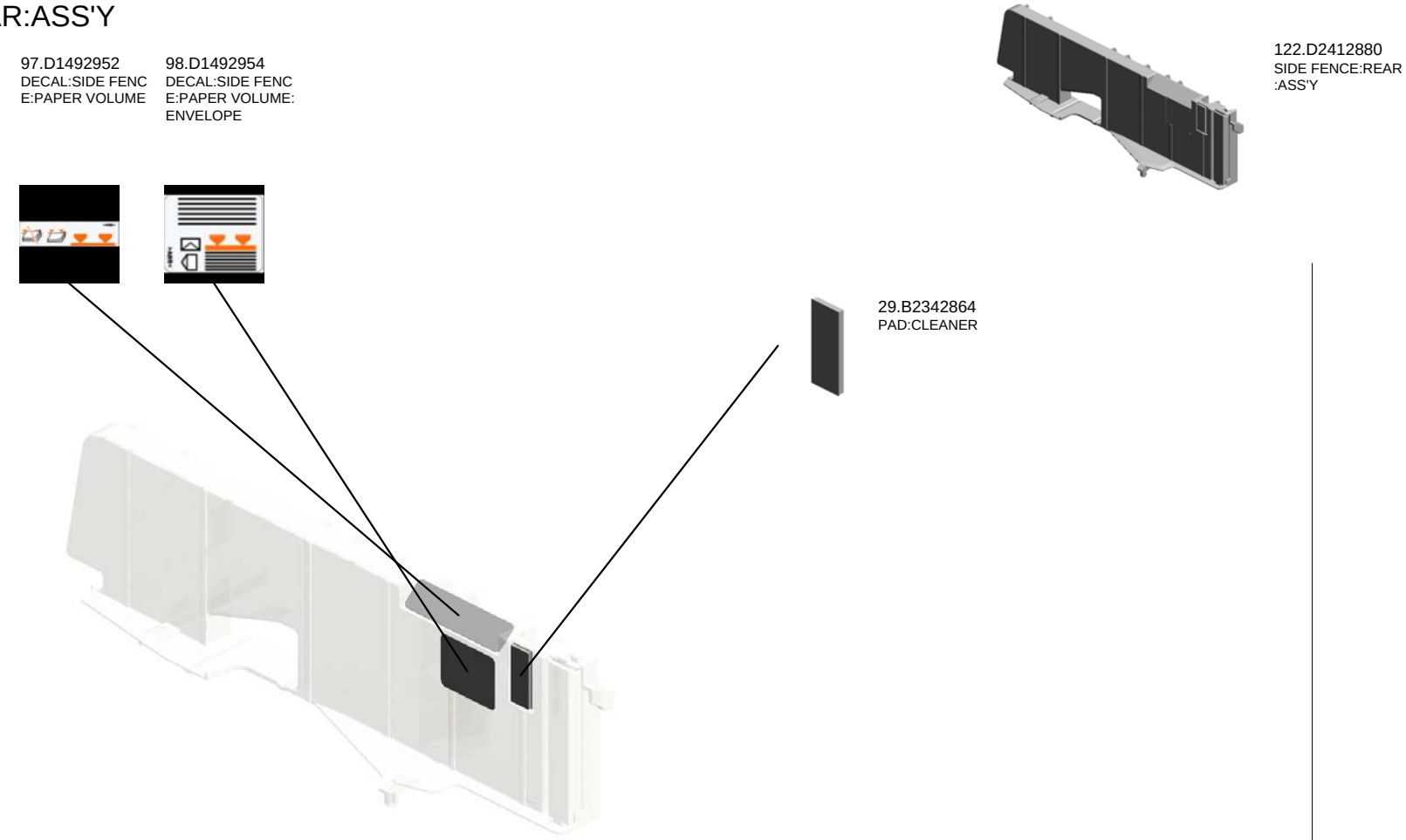

Copyright (c) 2006-2016 Ricoh Company, Ltd. 2016/07/29 Version 1.00

U005_S009_S005
SIDE FENCE:AUXILIARY

125.D2412885
DECAL:SIDE FENC
E:AUXILIARY

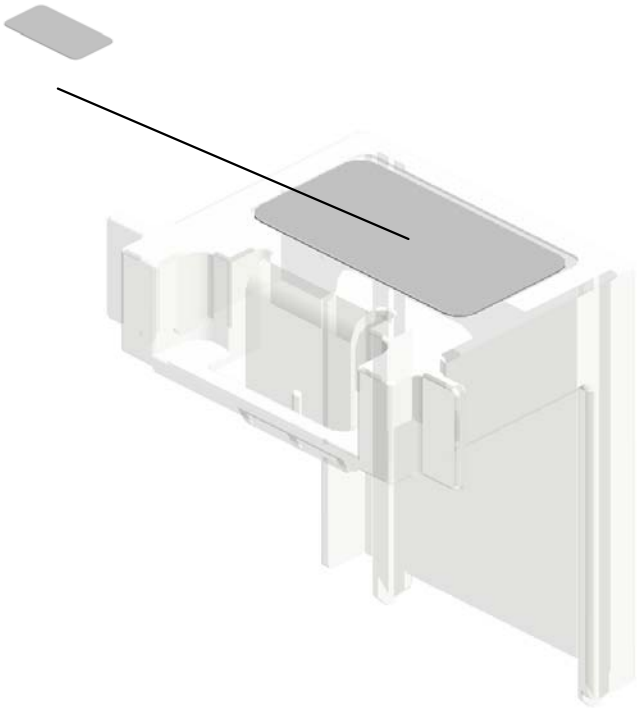

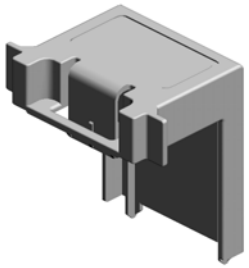

120.D2412873
SIDE FENCE:AUXIL
IARY

Copyright (c) 2006-2016 Ricoh Company, Ltd. 2016/07/29 Version 1.00

U005_S009_S006
SIDE FENCE:AUXILIARY

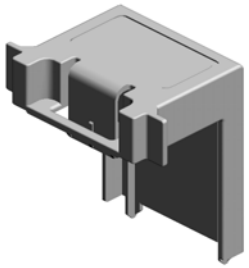

120.D2412873
SIDE FENCE:AUXIL
IARY

125.D2412885
DECAL:SIDE FENC
E:AUXILIARY

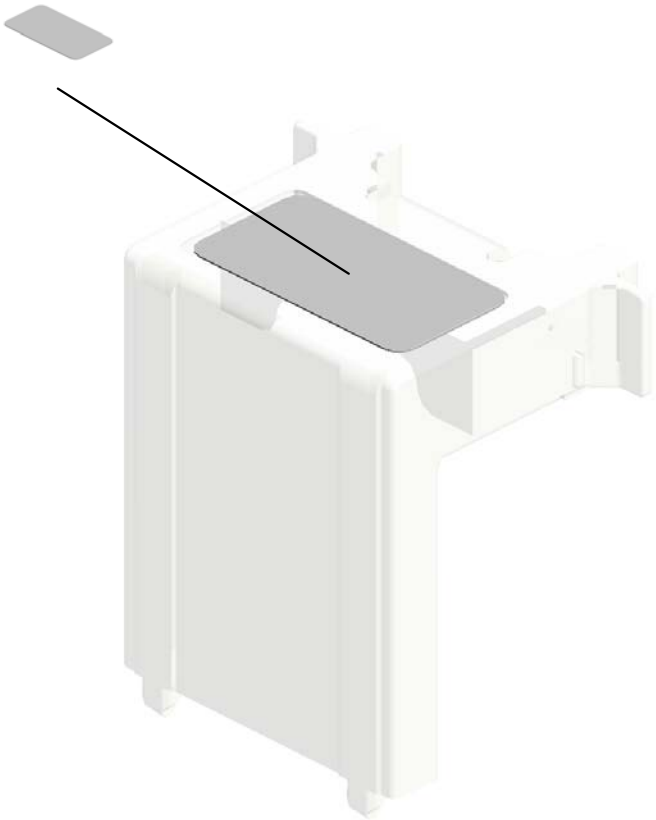

Copyright (c) 2006-2016 Ricoh Company, Ltd. 2016/07/29 Version 1.00

U006.TONNER SUPPRY

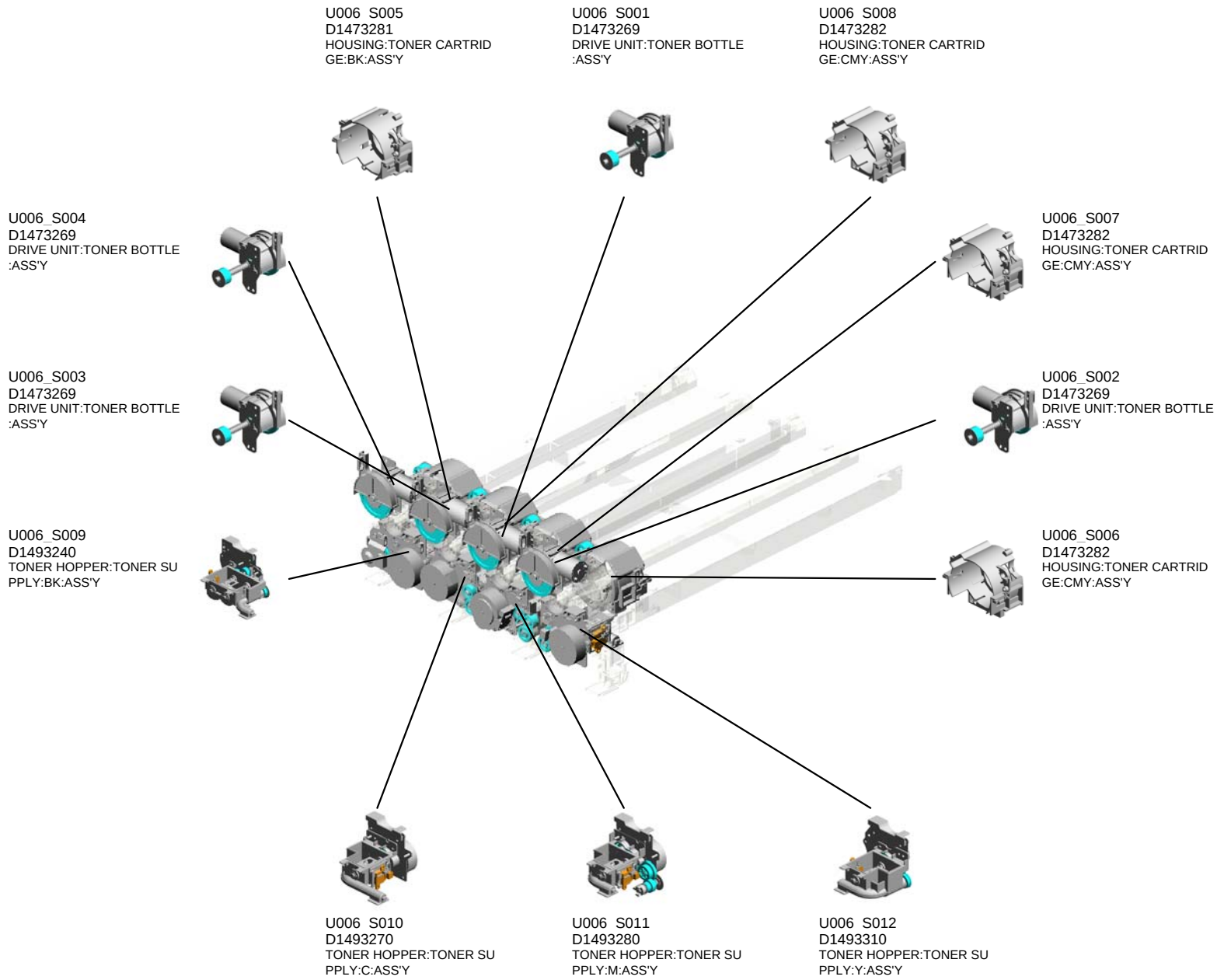

Copyright (c) 2006-2016 Ricoh Company, Ltd. 2016/07/29 Version 1.00

U006.TONNER SUPPRY

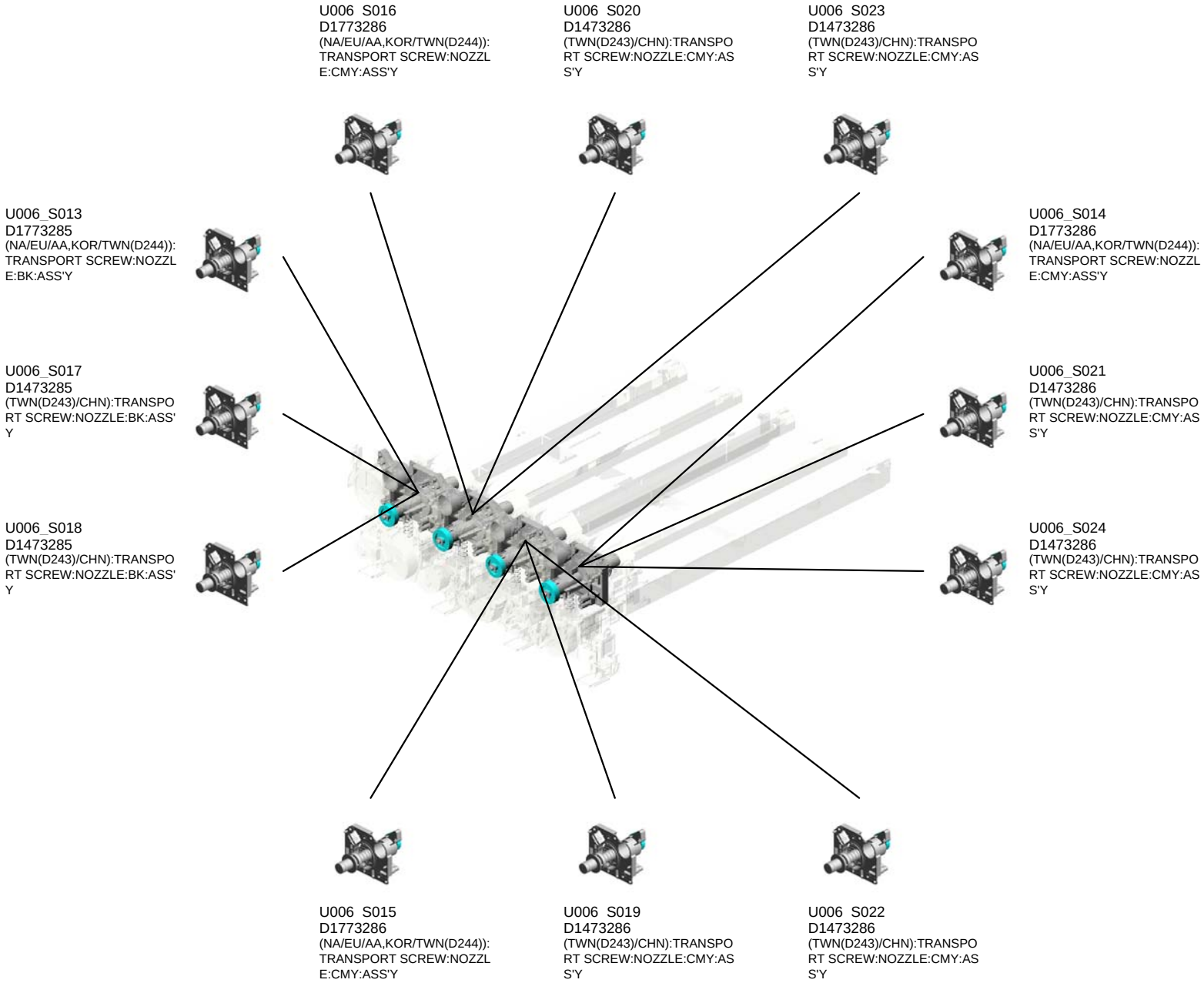

Copyright (c) 2006-2016 Ricoh Company, Ltd. 2016/07/29 Version 1.00

U006.TONNER SUPPRY

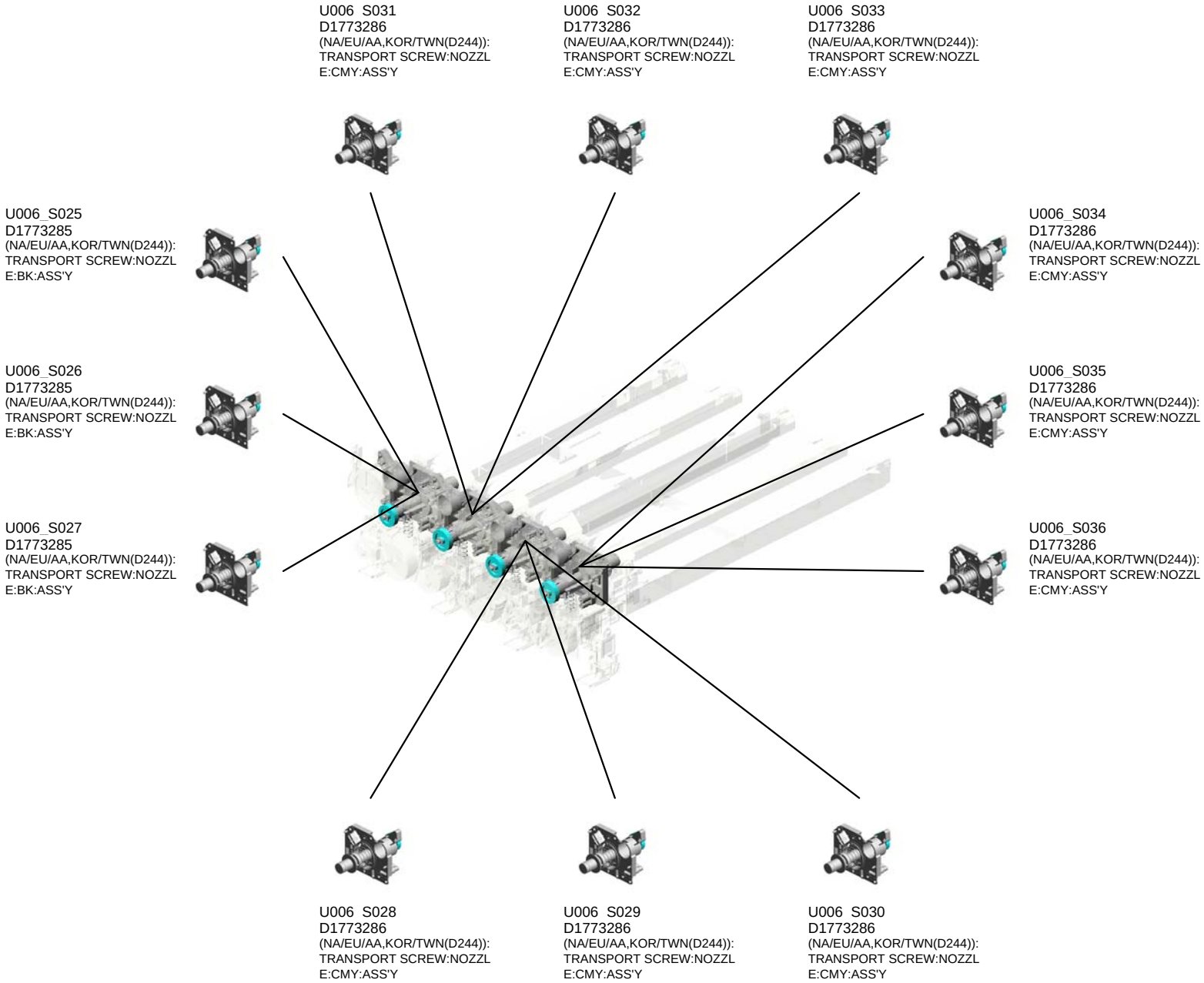

Copyright (c) 2006-2016 Ricoh Company, Ltd. 2016/07/29 Version 1.00

U006
TONNER SUPPRY

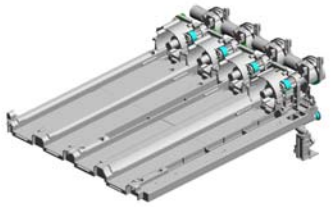

30.D1495174
(x8)
(TWN(D243)/CHN):
PCB:TCB

3.04583008N
(x35)
HEXAGON HEAD T
APPING SCREW:3
X8

10.11050760
(x7)
CLAMP:LWSM-051
1A

23.D1493307
BASE:TONER SUP
PLY

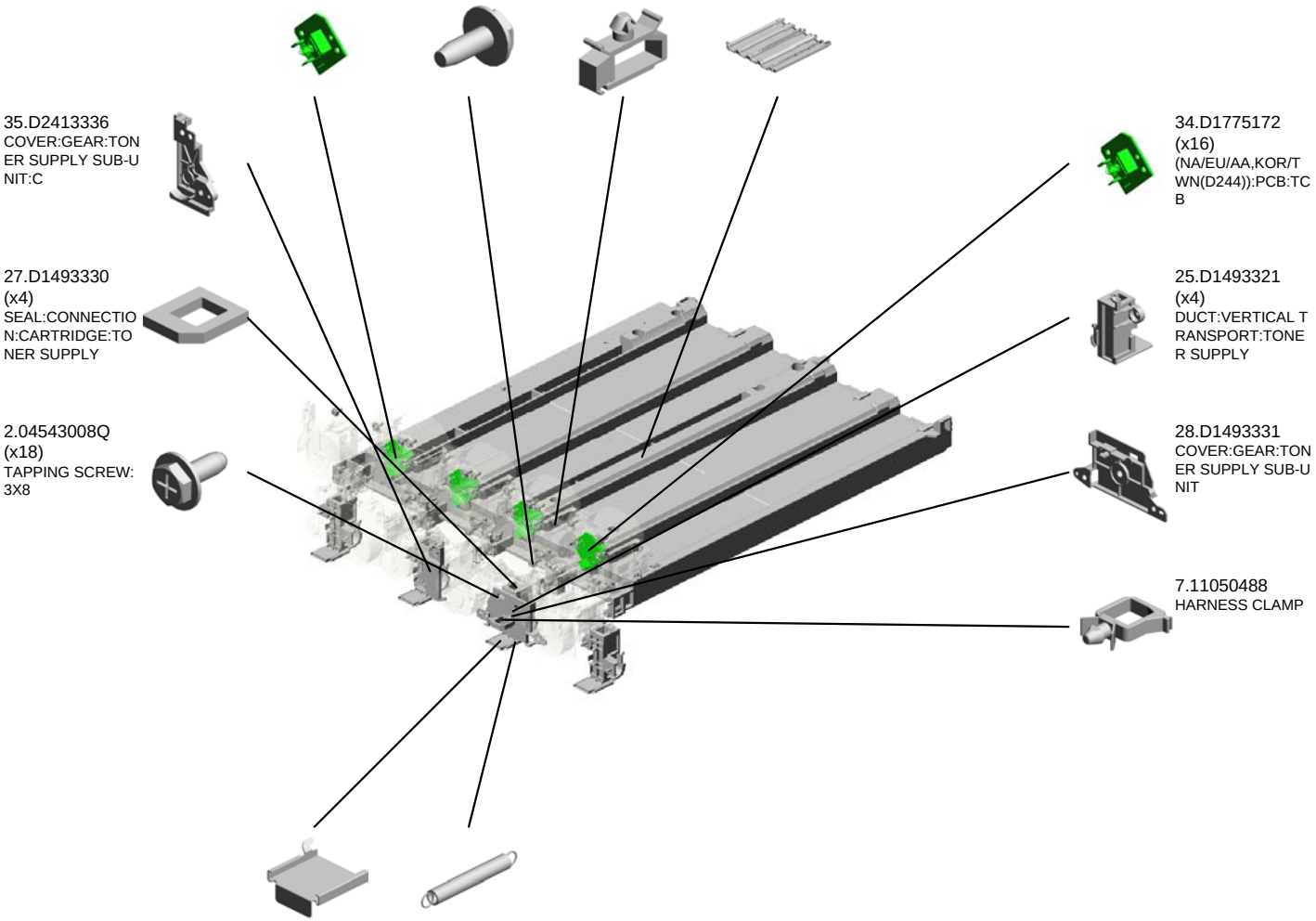

Copyright (c) 2006-2016 Ricoh Company, Ltd. 2016/07/29 Version 1.00

U006_S001
DRIVE UNIT:TONER BOTTLE:ASS'Y

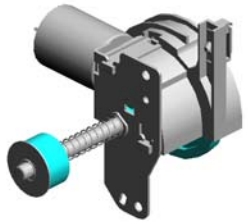

13.D1473269
DRIVE UNIT:TONE
R BOTTLE:ASS'Y

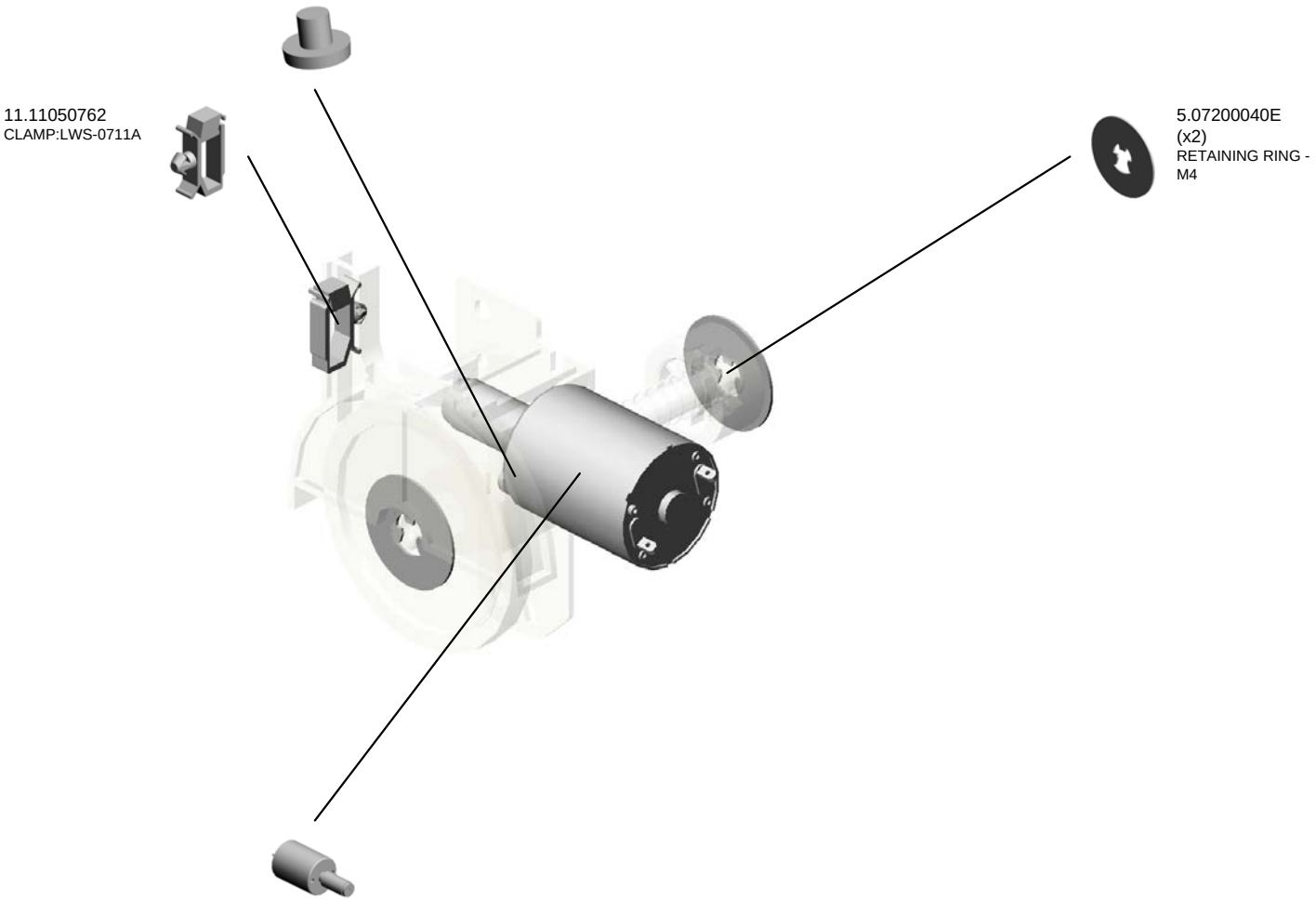

Copyright (c) 2006-2016 Ricoh Company, Ltd. 2016/07/29 Version 1.00

U006_S002
DRIVE UNIT:TONER BOTTLE:ASS'Y

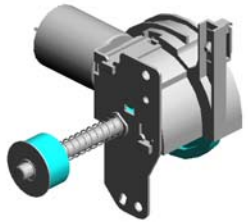

13.D1473269
DRIVE UNIT:TONE
R BOTTLE:ASS'Y

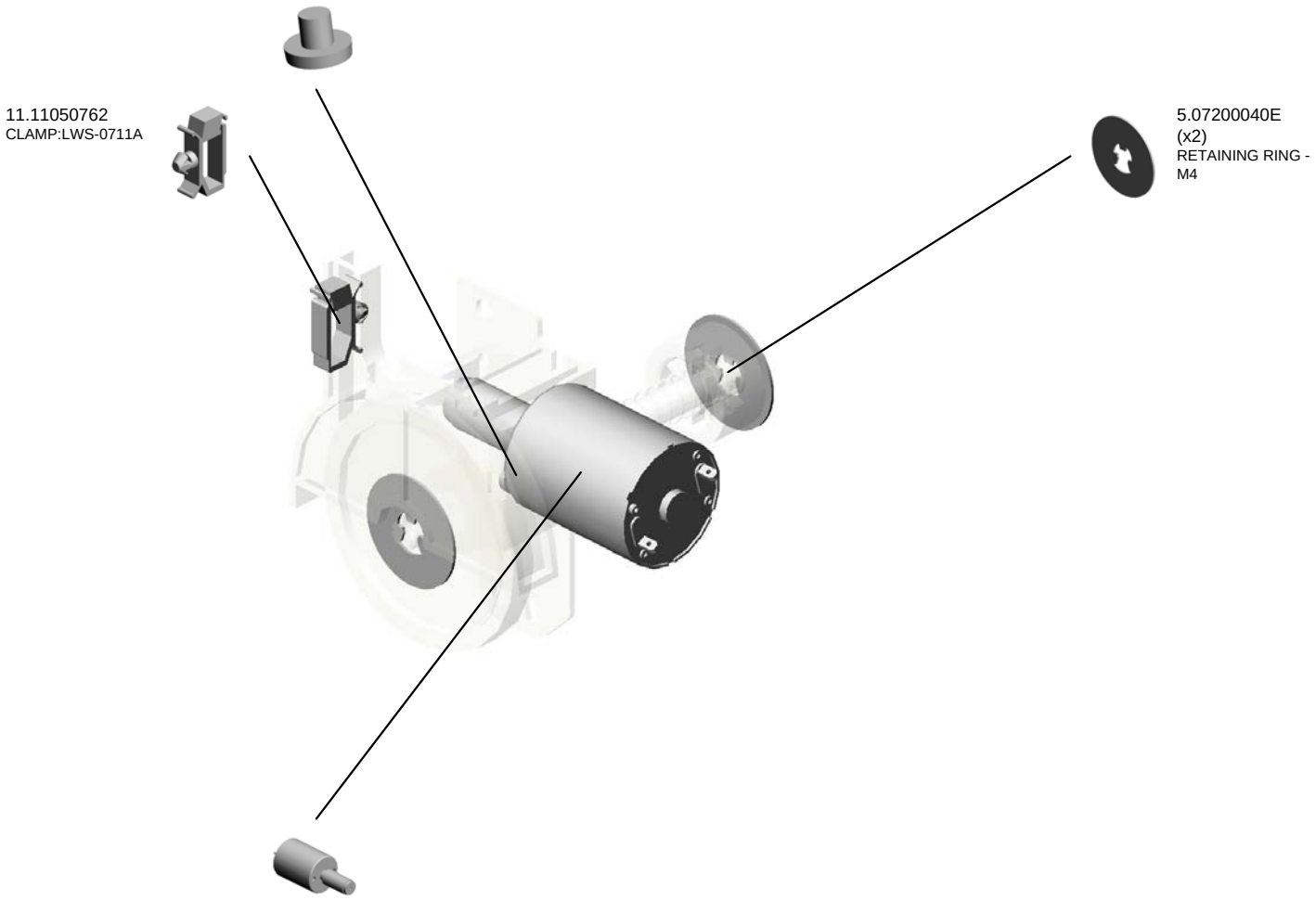

Copyright (c) 2006-2016 Ricoh Company, Ltd. 2016/07/29 Version 1.00

U006_S003
DRIVE UNIT:TONER BOTTLE:ASS'Y

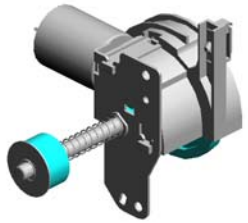

13.D1473269
DRIVE UNIT:TONE
R BOTTLE:ASS'Y

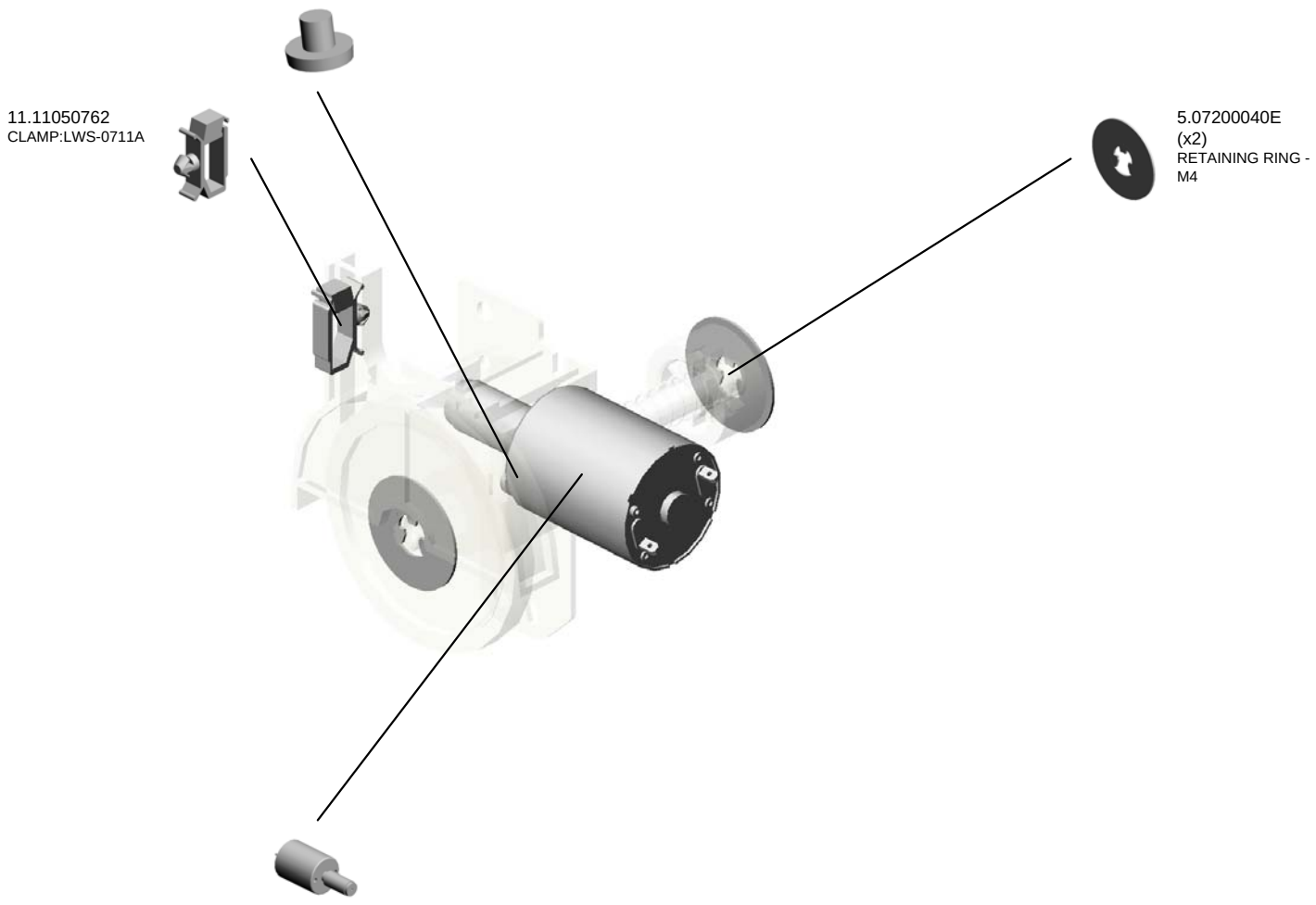

Copyright (c) 2006-2016 Ricoh Company, Ltd. 2016/07/29 Version 1.00

U006_S004
DRIVE UNIT:TONER BOTTLE:ASS'Y

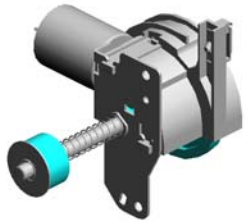

13.D1473269
DRIVE UNIT:TONE
R BOTTLE:ASS'Y

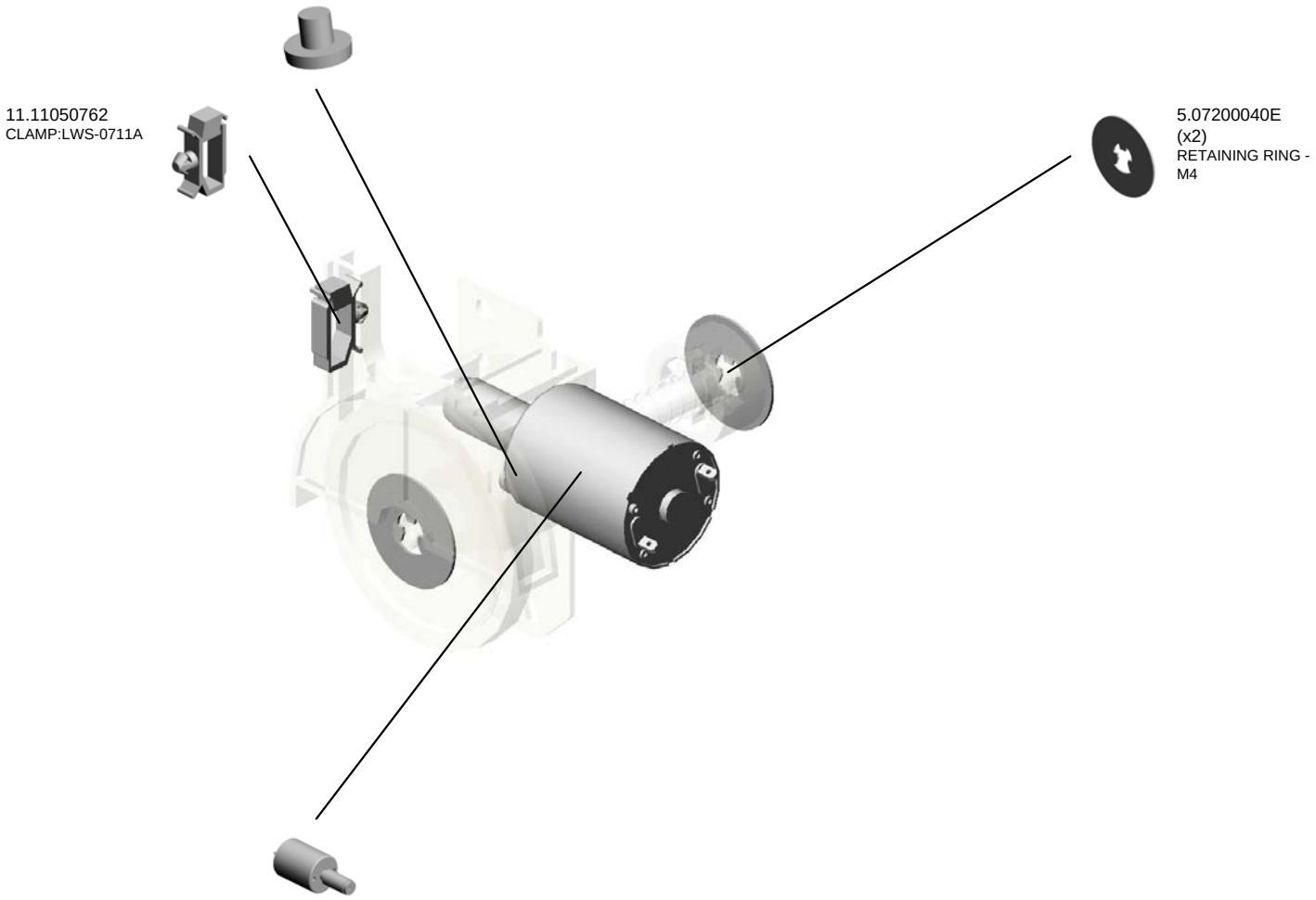

Copyright (c) 2006-2016 Ricoh Company, Ltd. 2016/07/29 Version 1.00

U006_S005
HOUSING:TONER CARTRIDGE:BK:ASS'Y

14.D1473281
HOUSING:TONER CARTRIDGE:BK:ASS'Y

18.D1473325
(x2)
TORSION SPRING: STOPPER:TONER CARTRIDGE:4.8N

Copyright (c) 2006-2016 Ricoh Company, Ltd. 2016/07/29 Version 1.00

U006_S006
HOUSING:TONER CARTRIDGE:CMY:ASS'Y

15.D1473282
HOUSING:TONER
CARTRIDGE:CMY:
ASS'Y

18.D1473325
(x2)
TORSION SPRING:
STOPPER:TONER
CARTRIDGE:4.8N

Copyright (c) 2006-2016 Ricoh Company, Ltd. 2016/07/29 Version 1.00

U006_S007
HOUSING:TONER CARTRIDGE:CMY:ASS'Y

15.D1473282
HOUSING:TONER
CARTRIDGE:CMY:
ASS'Y

18.D1473325
(x2)
TORSION SPRING:
STOPPER:TONER
CARTRIDGE:4.8N

Copyright (c) 2006-2016 Ricoh Company, Ltd. 2016/07/29 Version 1.00

U006_S008
HOUSING:TONER CARTRIDGE:CMY:ASS'Y

15.D1473282
HOUSING:TONER
CARTRIDGE:CMY:
ASS'Y

18.D1473325
(x2)
TORSION SPRING:
STOPPER:TONER
CARTRIDGE:4.8N

Copyright (c) 2006-2016 Ricoh Company, Ltd. 2016/07/29 Version 1.00

U006_S009
TONER HOPPER:TONER SUPPLY:BK:ASS'Y

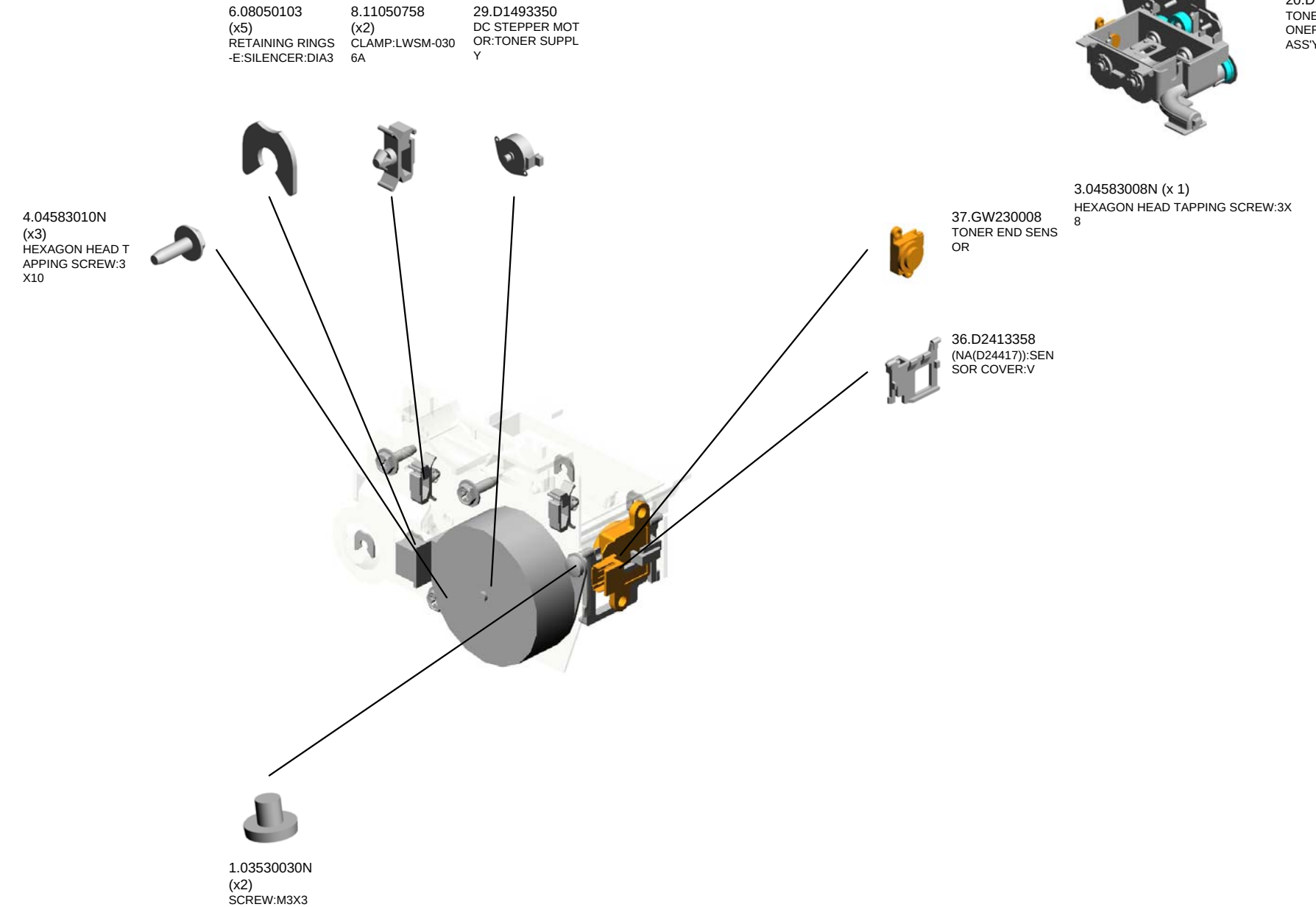

Copyright (c) 2006-2016 Ricoh Company, Ltd. 2016/07/29 Version 1.00

U006_S010
TONER HOPPER:TONER SUPPLY:C:ASS'Y

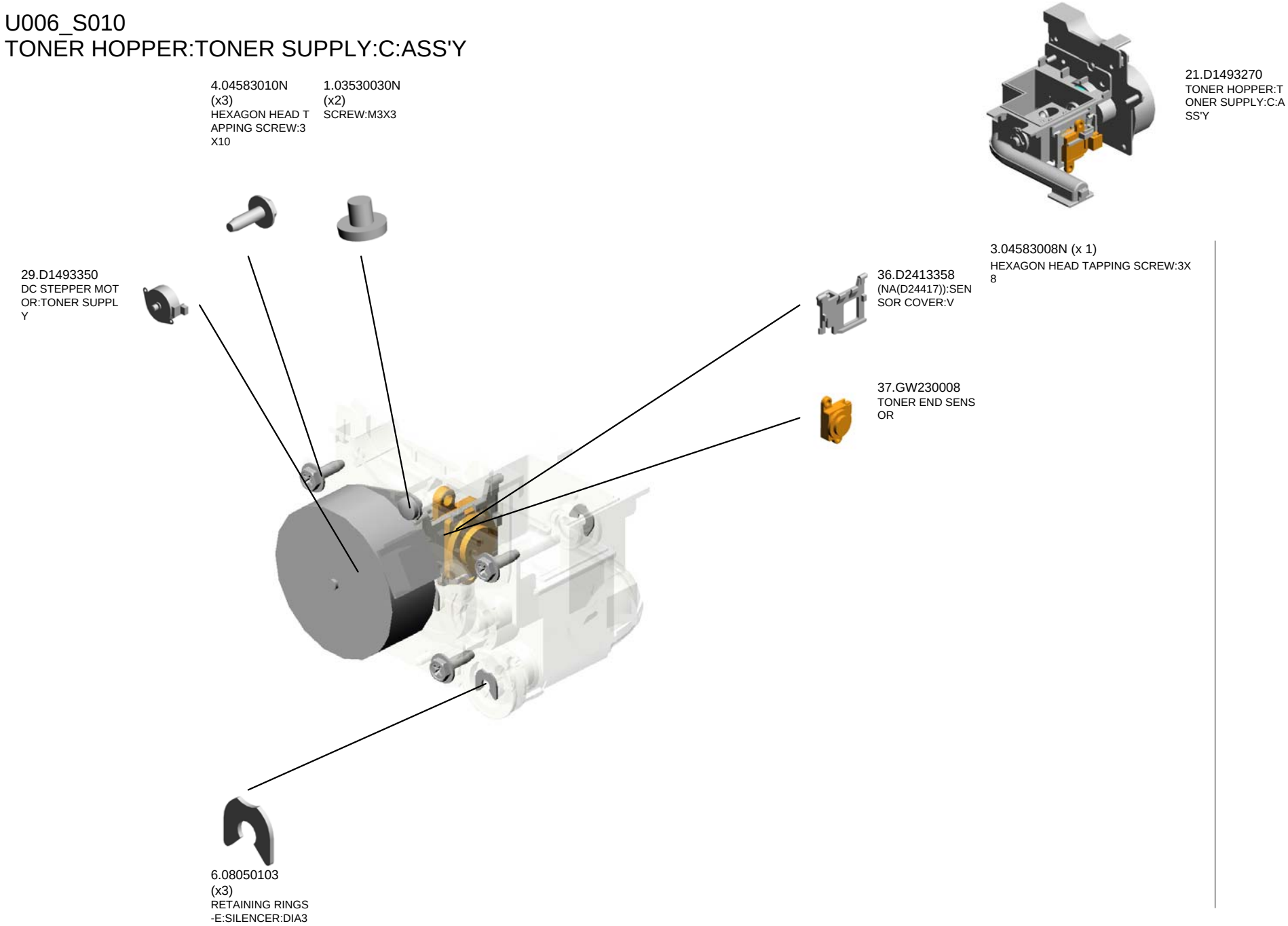

Copyright (c) 2006-2016 Ricoh Company, Ltd. 2016/07/29 Version 1.00

U006_S011
TONER HOPPER:TONER SUPPLY:M:ASS'Y

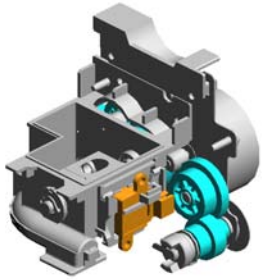

22.D1493280
TONER HOPPER:TONER SUPPLY:M:ASS'Y

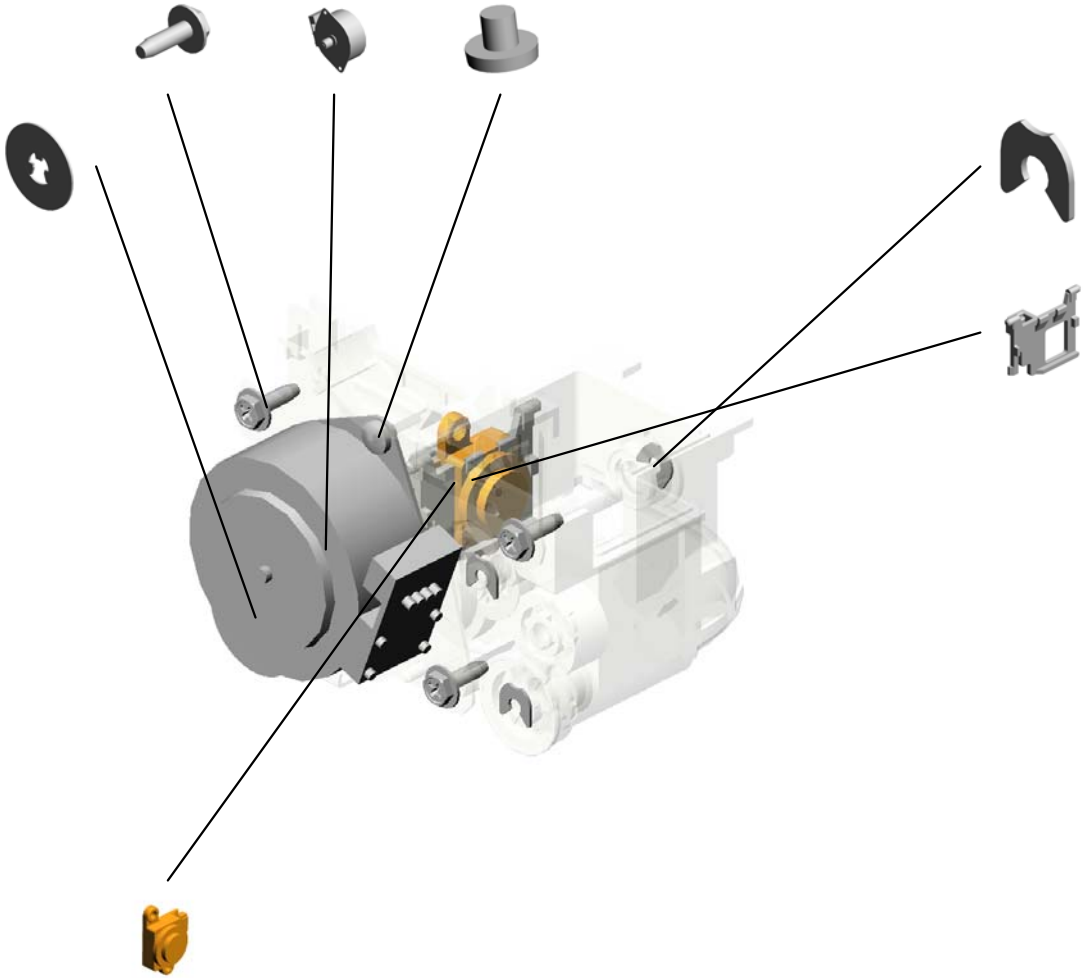

3.04583008N (x 1)
HEXAGON HEAD TAPPING SCREW:3X8

Copyright (c) 2006-2016 Ricoh Company, Ltd. 2016/07/29 Version 1.00

U006_S012
TONER HOPPER:TONER SUPPLY:Y:ASS'Y

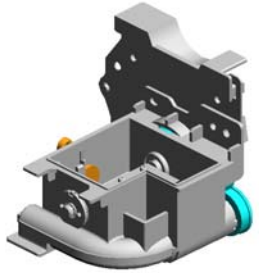

24.D1493310
TONER HOPPER:TONER SUPPLY:Y:ASS'Y

4.04583010N
(x3)
HEXAGON HEAD TAPPING SCREW:3X10

6.08050103
(x3)
RETAINING RINGS-E:SILENCER:DIA3

29.D1493350
DC STEPPER MOTOR:TONER SUPPLY

3.04583008N (x 1)
HEXAGON HEAD TAPPING SCREW:3X8

37.GW230008
TONER END SENSOR

36.D2413358
(NA(D24417)):SENSOR COVER:V

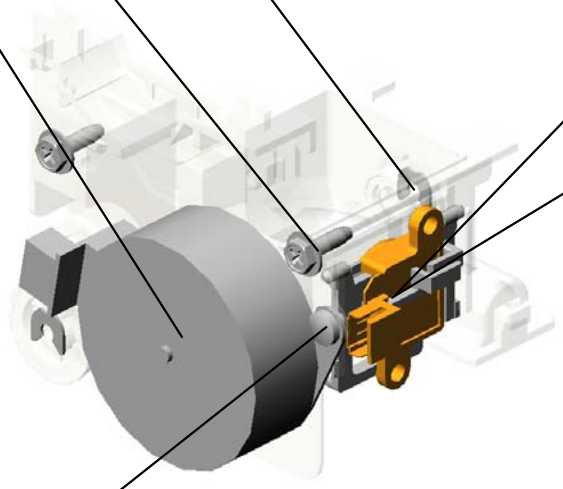

1.03530030N
(x2)
SCREW:M3X3

Copyright (c) 2006-2016 Ricoh Company, Ltd. 2016/07/29 Version 1.00

U006_S013
(NA/EU/AA,KOR/TWN(D244)):TRANSPORT SCREW:NOZZLE:BK:ASS'Y

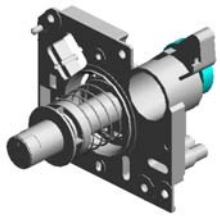

32.D1773285
(NA/EU/AA,KOR/TWN(D244)):TRANSPORT SCREW:NOZZLE:BK:ASS'Y

6.08050103
RETAINING RINGS
-E:SILENCER:DIA3

9.11050759
CLAMP:LWSM-0605A

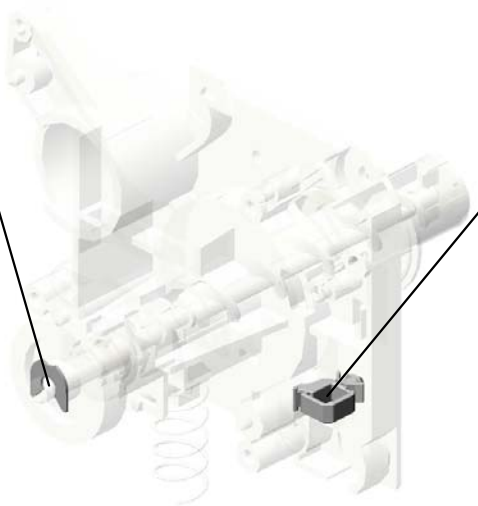

Copyright (c) 2006-2016 Ricoh Company, Ltd. 2016/07/29 Version 1.00

U006_S014
(NA/EU/AA,KOR/TWN(D244)):TRANSPORT SCREW:NOZZLE:CMY:ASS'Y

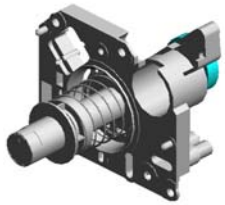

33.D1773286
(NA/EU/AA,KOR/TWN(D244)):TRANSPORT SCREW:NOZZLE:CMY:ASS'Y

6.08050103
RETAINING RINGS
-E:SILENCER:DIA3

9.11050759
CLAMP:LWSM-0605A

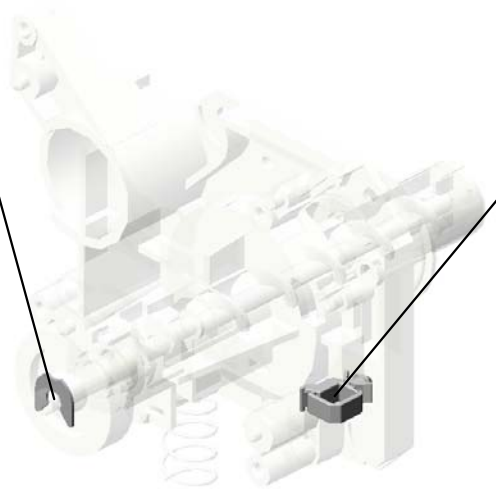

Copyright (c) 2006-2016 Ricoh Company, Ltd. 2016/07/29 Version 1.00

U006_S015
(NA/EU/AA,KOR/TWN(D244)):TRANSPORT SCREW:NOZZLE:CMY:ASS'Y

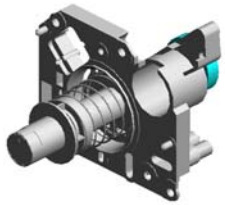

33.D1773286
(NA/EU/AA,KOR/TWN(D244)):TRANSPORT SCREW:NOZZLE:CMY:ASS'Y

6.08050103
RETAINING RINGS
-E:SILENCER:DIA3

9.11050759
CLAMP:LWSM-0605A

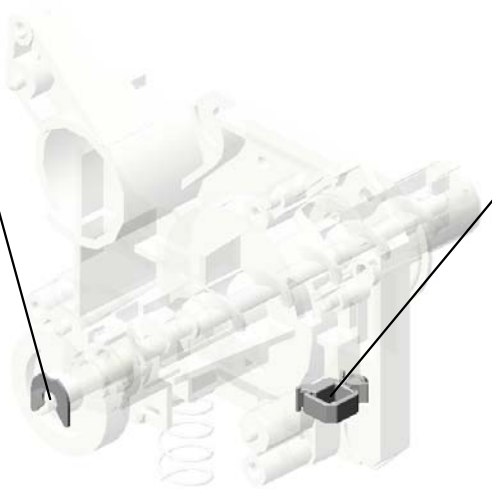

Copyright (c) 2006-2016 Ricoh Company, Ltd. 2016/07/29 Version 1.00

U006_S016
(NA/EU/AA,KOR/TWN(D244)):TRANSPORT SCREW:NOZZLE:CMY:ASS'Y

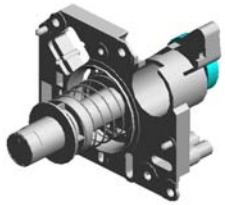

33.D1773286
(NA/EU/AA,KOR/TWN(D244)):TRANSPORT SCREW:NOZZLE:CMY:ASS'Y

6.08050103
RETAINING RINGS
-E:SILENCER:DIA3

9.11050759
CLAMP:LWSM-0605A

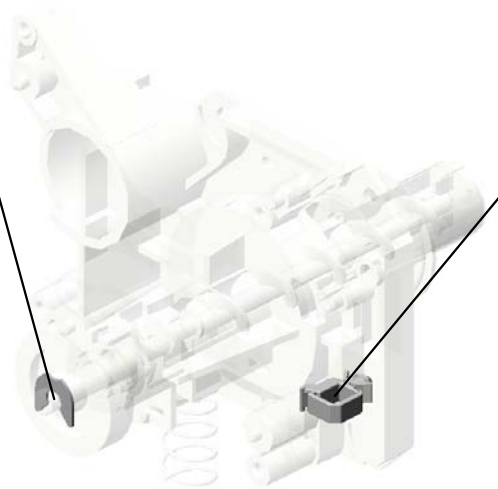

Copyright (c) 2006-2016 Ricoh Company, Ltd. 2016/07/29 Version 1.00

U006_S017
(TWN(D243)/CHN):TRANSPORT SCREW:NOZZLE:BK:ASS'Y

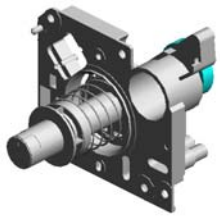

16.D1473285
(TWN(D243)/CHN):
TRANSPORT SCR
EW:NOZZLE:BK:AS
S'Y

6.08050103
RETAINING RINGS
-E:SILENCER:DIA3

9.11050759
CLAMP:LWSM-060
5A

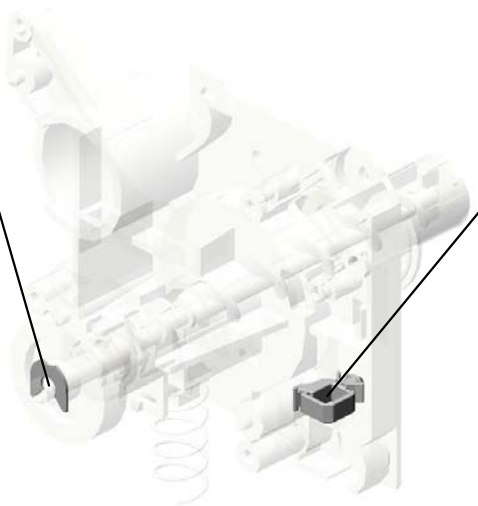

Copyright (c) 2006-2016 Ricoh Company, Ltd. 2016/07/29 Version 1.00

U006_S018
(TWN(D243)/CHN):TRANSPORT SCREW:NOZZLE:BK:ASS'Y

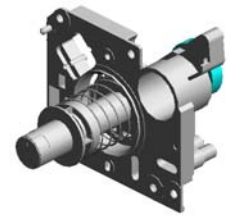

16.D1473285
(TWN(D243)/CHN):
TRANSPORT SCR
EW:NOZZLE:BK:AS
S'Y

6.08050103
RETAINING RINGS
-E:SILENCER:DIA3

9.11050759
CLAMP:LWSM-060
5A

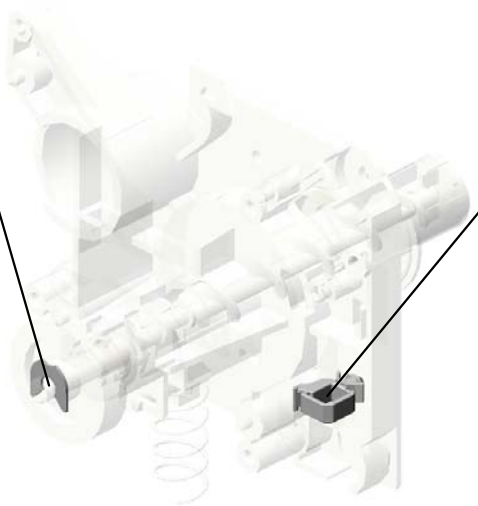

Copyright (c) 2006-2016 Ricoh Company, Ltd. 2016/07/29 Version 1.00

U006_S019
(TWN(D243)/CHN):TRANSPORT SCREW:NOZZLE:CMY:ASS'Y

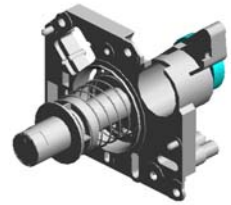

17.D1473286
(TWN(D243)/CHN):
TRANSPORT SCR
EW:NOZZLE:CMY:
ASS'Y

6.08050103
RETAINING RINGS
-E:SILENCER:DIA3

9.11050759
CLAMP:LWSM-060
5A

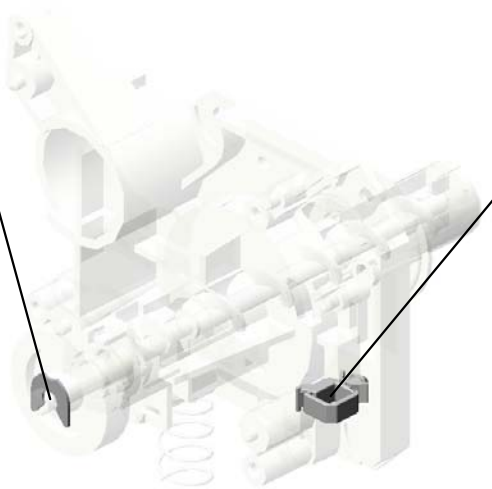

Copyright (c) 2006-2016 Ricoh Company, Ltd. 2016/07/29 Version 1.00

U006_S020
(TWN(D243)/CHN):TRANSPORT SCREW:NOZZLE:CMY:ASS'Y

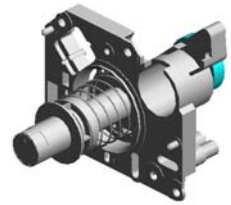

17.D1473286
(TWN(D243)/CHN):
TRANSPORT SCR
EW:NOZZLE:CMY:
ASS'Y

6.08050103
RETAINING RINGS
-E:SILENCER:DIA3

9.11050759
CLAMP:LWSM-060
5A

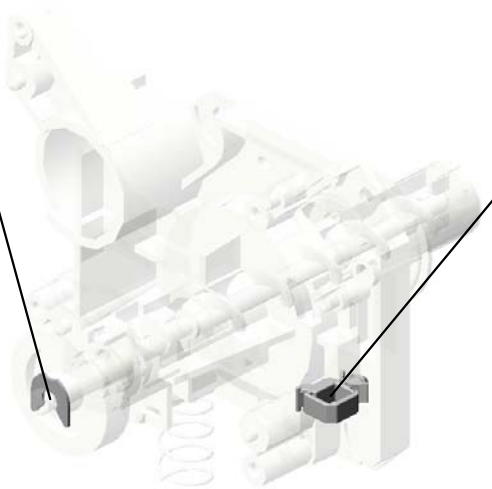

Copyright (c) 2006-2016 Ricoh Company, Ltd. 2016/07/29 Version 1.00

U006_S021
(TWN(D243)/CHN):TRANSPORT SCREW:NOZZLE:CMY:ASS'Y

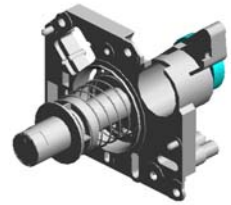

17.D1473286
(TWN(D243)/CHN):
TRANSPORT SCR
EW:NOZZLE:CMY:
ASS'Y

6.08050103
RETAINING RINGS
-E:SILENCER:DIA3

9.11050759
CLAMP:LWSM-060
5A

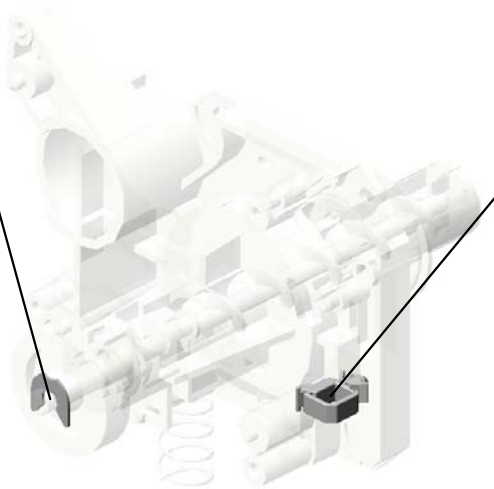

Copyright (c) 2006-2016 Ricoh Company, Ltd. 2016/07/29 Version 1.00

U006_S022
(TWN(D243)/CHN):TRANSPORT SCREW:NOZZLE:CMY:ASS'Y

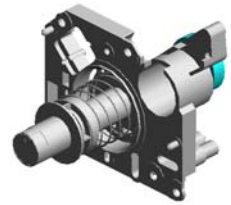

17.D1473286
(TWN(D243)/CHN):
TRANSPORT SCR
EW:NOZZLE:CMY:
ASS'Y

6.08050103
RETAINING RINGS
-E:SILENCER:DIA3

9.11050759
CLAMP:LWSM-060
5A

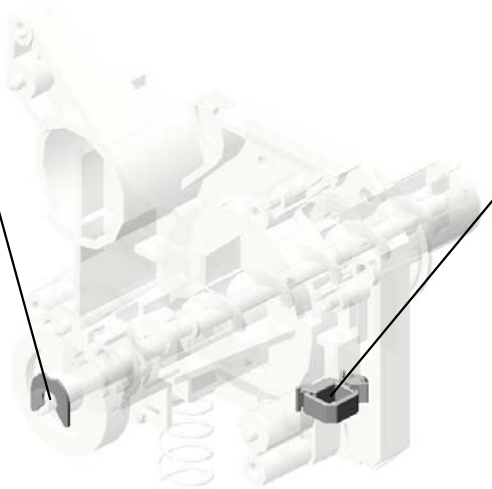

Copyright (c) 2006-2016 Ricoh Company, Ltd. 2016/07/29 Version 1.00

U006_S023
(TWN(D243)/CHN):TRANSPORT SCREW:NOZZLE:CMY:ASS'Y

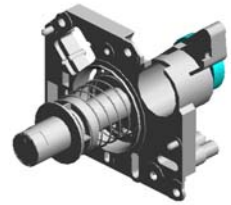

17.D1473286
(TWN(D243)/CHN):
TRANSPORT SCR
EW:NOZZLE:CMY:
ASS'Y

6.08050103
RETAINING RINGS
-E:SILENCER:DIA3

9.11050759
CLAMP:LWSM-060
5A

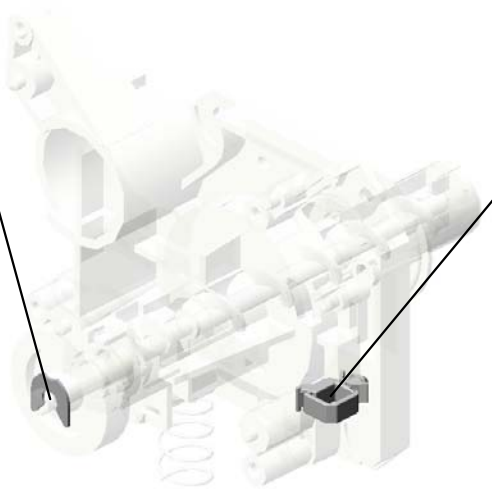

Copyright (c) 2006-2016 Ricoh Company, Ltd. 2016/07/29 Version 1.00

U006_S024
(TWN(D243)/CHN):TRANSPORT SCREW:NOZZLE:CMY:ASS'Y

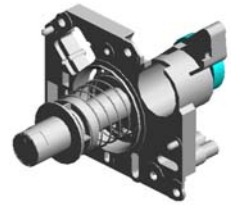

17.D1473286
(TWN(D243)/CHN):
TRANSPORT SCR
EW:NOZZLE:CMY:
ASS'Y

6.08050103
RETAINING RINGS
-E:SILENCER:DIA3

9.11050759
CLAMP:LWSM-060
5A

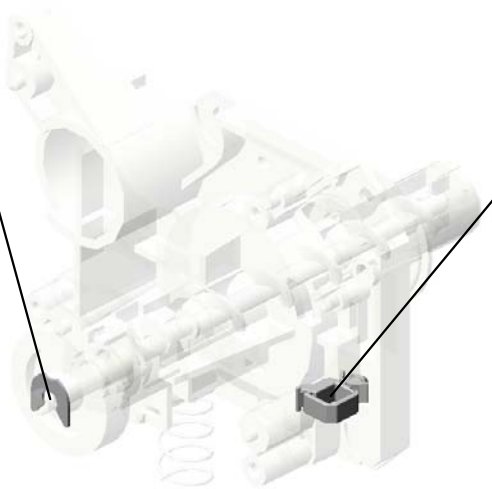

Copyright (c) 2006-2016 Ricoh Company, Ltd. 2016/07/29 Version 1.00

U006_S025
(NA/EU/AA,KOR/TWN(D244)):TRANSPORT SCREW:NOZZLE:BK:ASS'Y

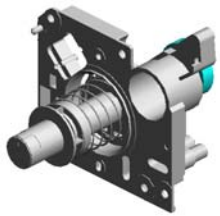

32.D1773285
(NA/EU/AA,KOR/TWN(D244)):TRANSPORT SCREW:NOZZLE:BK:ASS'Y

6.08050103
RETAINING RINGS
-E:SILENCER:DIA3

9.11050759
CLAMP:LWSM-0605A

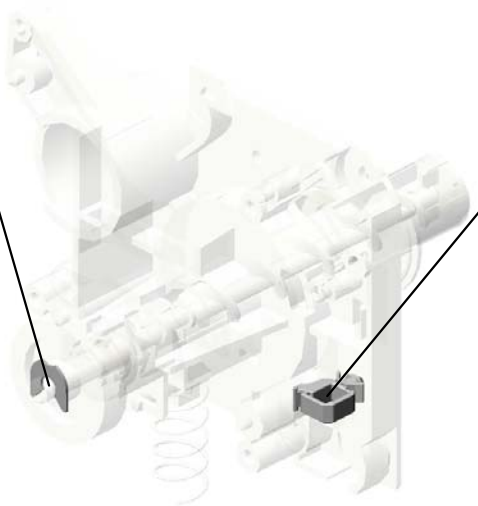

Copyright (c) 2006-2016 Ricoh Company, Ltd. 2016/07/29 Version 1.00

U006_S026
(NA/EU/AA,KOR/TWN(D244)):TRANSPORT SCREW:NOZZLE:BK:ASS'Y

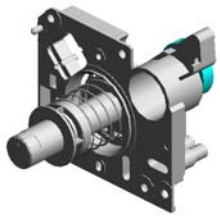

32.D1773285
(NA/EU/AA,KOR/TWN(D244)):TRANSPORT SCREW:NOZZLE:BK:ASS'Y

6.08050103
RETAINING RINGS
-E:SILENCER:DIA3

9.11050759
CLAMP:LWSM-0605A

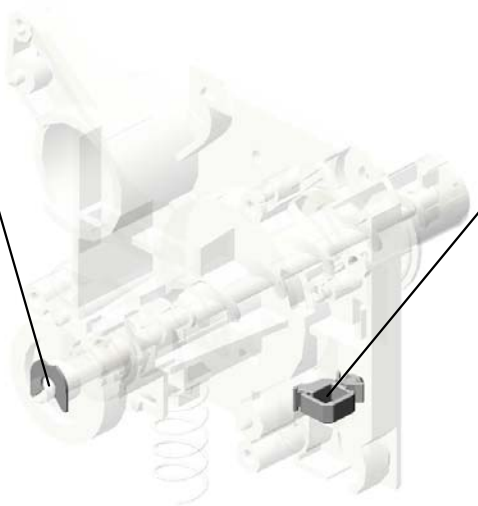

Copyright (c) 2006-2016 Ricoh Company, Ltd. 2016/07/29 Version 1.00

U006_S027
(NA/EU/AA,KOR/TWN(D244)):TRANSPORT SCREW:NOZZLE:BK:ASS'Y

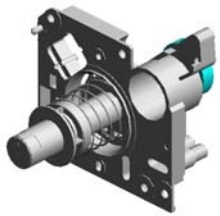

32.D1773285
(NA/EU/AA,KOR/TWN(D244)):TRANSPORT SCREW:NOZZLE:BK:ASS'Y

6.08050103
RETAINING RINGS
-E:SILENCER:DIA3

9.11050759
CLAMP:LWSM-0605A

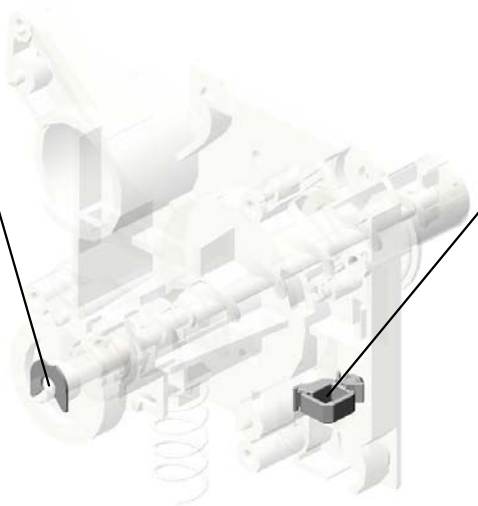

Copyright (c) 2006-2016 Ricoh Company, Ltd. 2016/07/29 Version 1.00

U006_S028
(NA/EU/AA,KOR/TWN(D244)):TRANSPORT SCREW:NOZZLE:CMY:ASS'Y

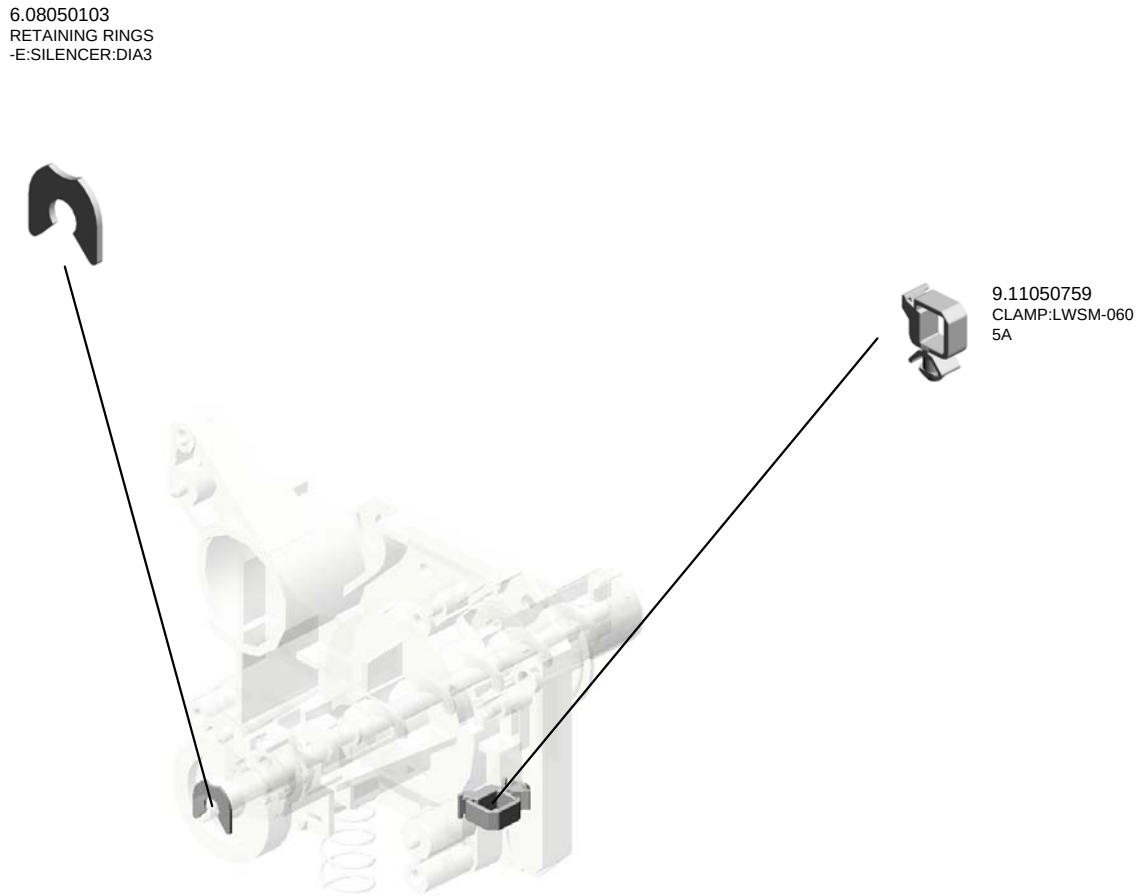

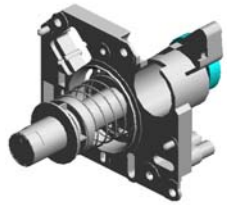

33.D1773286
(NA/EU/AA,KOR/T
WN(D244)):TRANS
PORT SCREW:NO
ZZLE:CMY:ASS'Y

Copyright (c) 2006-2016 Ricoh Company, Ltd. 2016/07/29 Version 1.00

U006_S029
(NA/EU/AA,KOR/TWN(D244)):TRANSPORT SCREW:NOZZLE:CMY:ASS'Y

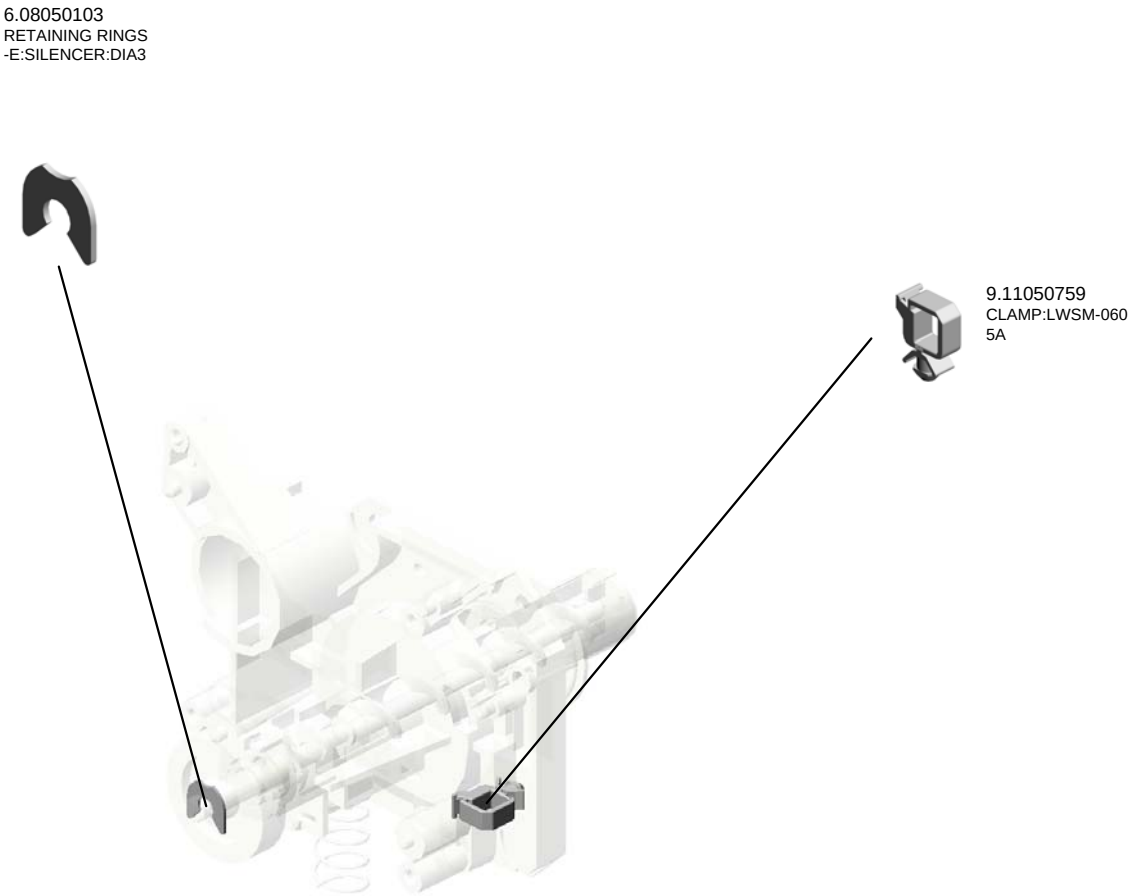

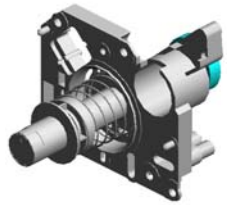

33.D1773286
(NA/EU/AA,KOR/T
WN(D244)):TRANS
PORT SCREW:NO
ZZLE:CMY:ASS'Y

Copyright (c) 2006-2016 Ricoh Company, Ltd. 2016/07/29 Version 1.00

U006_S030
(NA/EU/AA,KOR/TWN(D244)):TRANSPORT SCREW:NOZZLE:CMY:ASS'Y

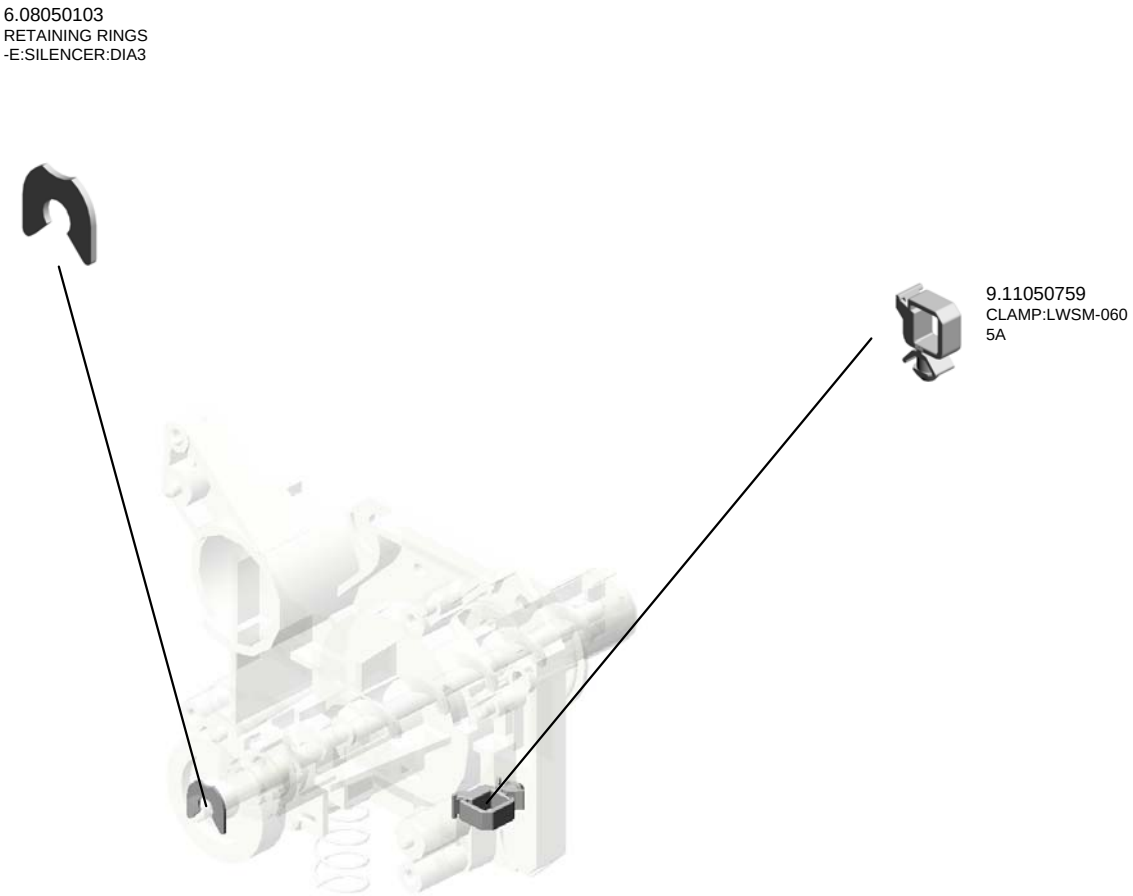

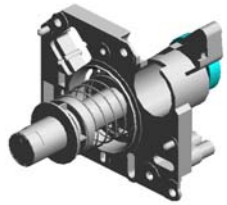

33.D1773286
(NA/EU/AA,KOR/T
WN(D244)):TRANS
PORT SCREW:NO
ZZLE:CMY:ASS'Y

Copyright (c) 2006-2016 Ricoh Company, Ltd. 2016/07/29 Version 1.00

U006_S031
(NA/EU/AA,KOR/TWN(D244)):TRANSPORT SCREW:NOZZLE:CMY:ASS'Y

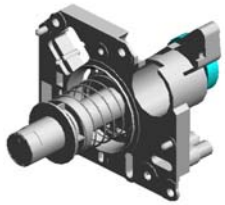

33.D1773286
(NA/EU/AA,KOR/TWN(D244)):TRANSPORT SCREW:NOZZLE:CMY:ASS'Y

6.08050103
RETAINING RINGS
-E:SILENCER:DIA3

9.11050759
CLAMP:LWSM-0605A

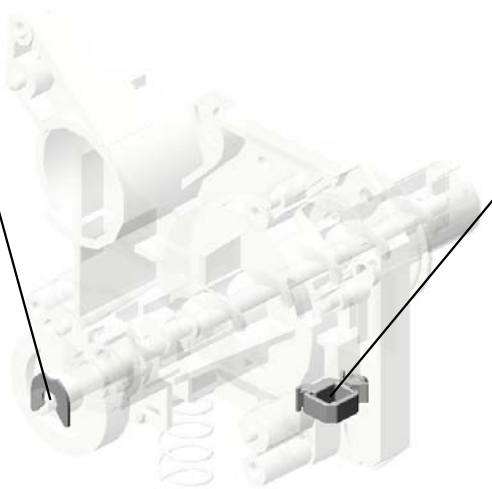

Copyright (c) 2006-2016 Ricoh Company, Ltd. 2016/07/29 Version 1.00

U006_S032
(NA/EU/AA,KOR/TWN(D244)):TRANSPORT SCREW:NOZZLE:CMY:ASS'Y

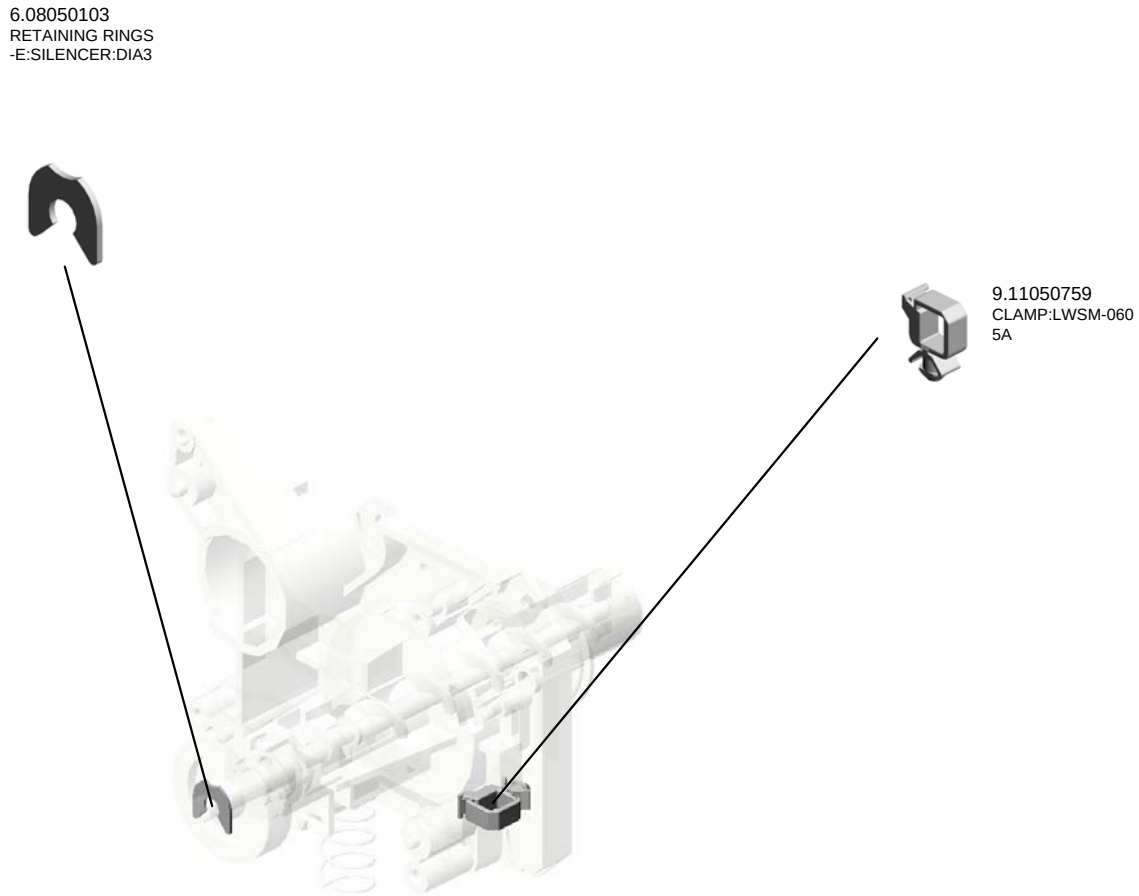

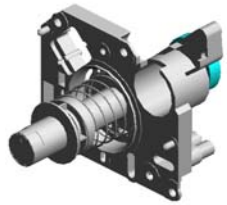

33.D1773286
(NA/EU/AA,KOR/T
WN(D244)):TRANS
PORT SCREW:NO
ZZLE:CMY:ASS'Y

Copyright (c) 2006-2016 Ricoh Company, Ltd. 2016/07/29 Version 1.00

U006_S033
(NA/EU/AA,KOR/TWN(D244)):TRANSPORT SCREW:NOZZLE:CMY:ASS'Y

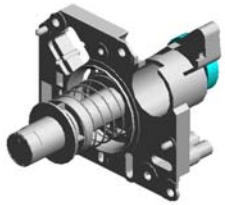

33.D1773286
(NA/EU/AA,KOR/TWN(D244)):TRANSPORT SCREW:NOZZLE:CMY:ASS'Y

6.08050103
RETAINING RINGS
-E:SILENCER:DIA3

9.11050759
CLAMP:LWSM-0605A

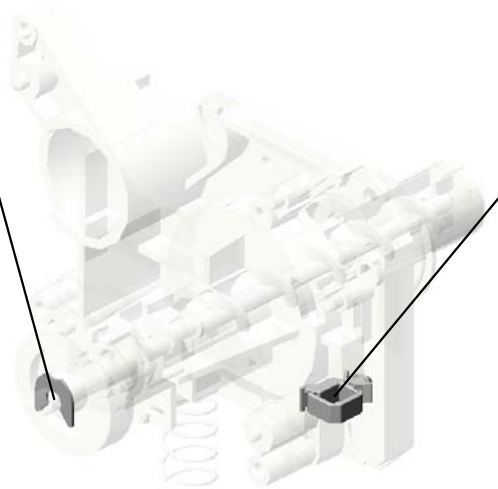

Copyright (c) 2006-2016 Ricoh Company, Ltd. 2016/07/29 Version 1.00

U006_S034
(NA/EU/AA,KOR/TWN(D244)):TRANSPORT SCREW:NOZZLE:CMY:ASS'Y

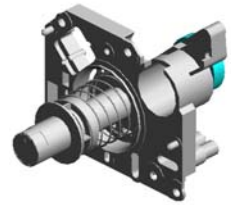

33.D1773286
(NA/EU/AA,KOR/TWN(D244)):TRANSPORT SCREW:NOZZLE:CMY:ASS'Y

6.08050103
RETAINING RINGS
-E:SILENCER:DIA3

9.11050759
CLAMP:LWSM-0605A

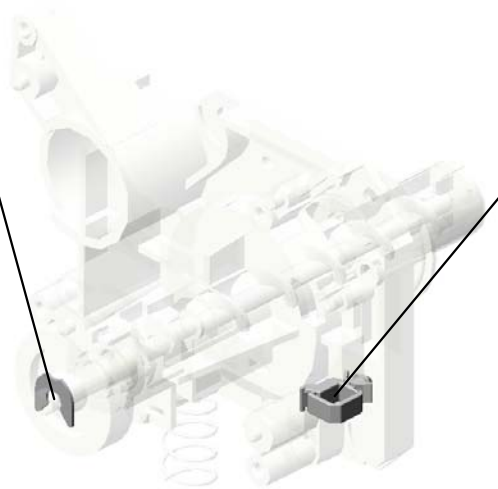

Copyright (c) 2006-2016 Ricoh Company, Ltd. 2016/07/29 Version 1.00

U006_S035
(NA/EU/AA,KOR/TWN(D244)):TRANSPORT SCREW:NOZZLE:CMY:ASS'Y

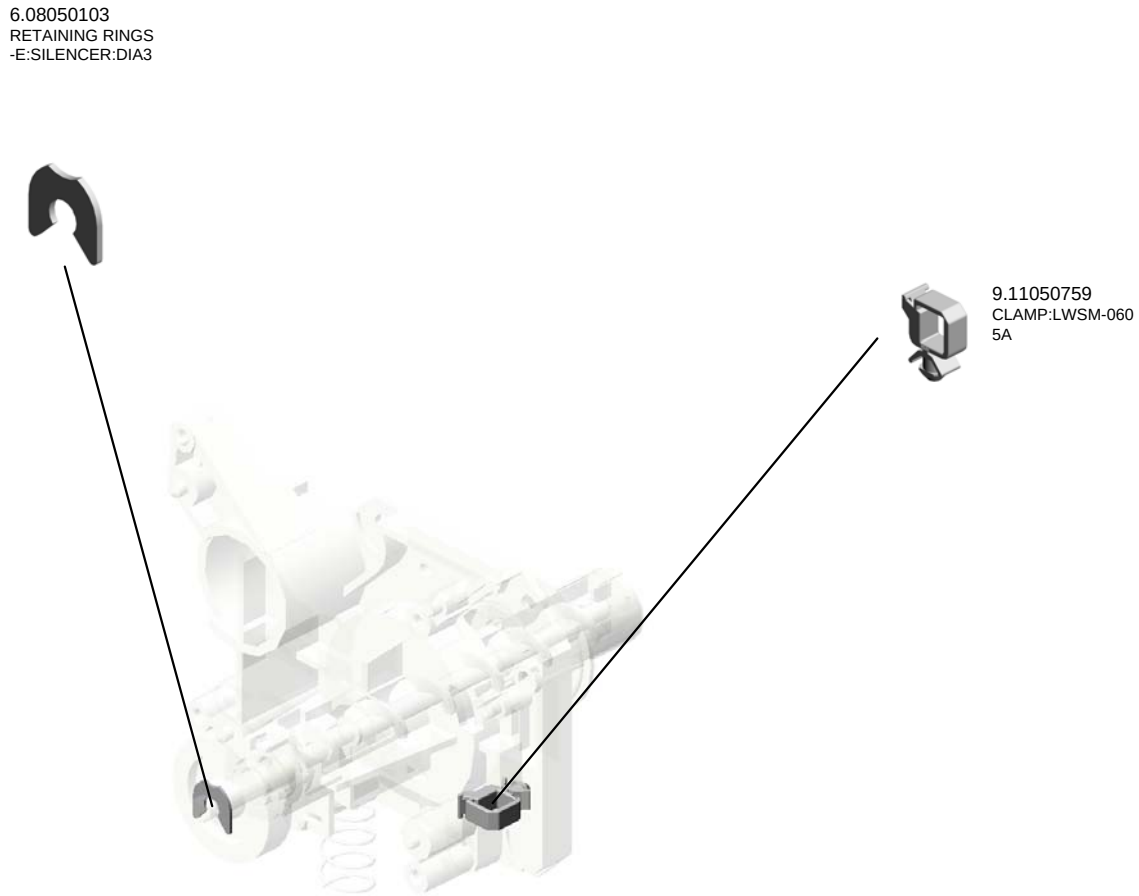

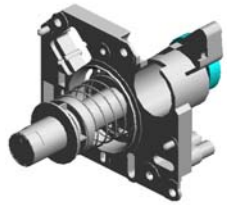

33.D1773286
(NA/EU/AA,KOR/T
WN(D244)):TRANS
PORT SCREW:NO
ZZLE:CMY:ASS'Y

Copyright (c) 2006-2016 Ricoh Company, Ltd. 2016/07/29 Version 1.00

U006_S036
(NA/EU/AA,KOR/TWN(D244)):TRANSPORT SCREW:NOZZLE:CMY:ASS'Y

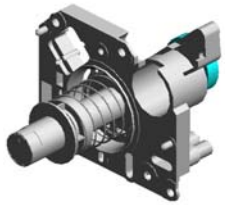

33.D1773286
(NA/EU/AA,KOR/TWN(D244)):TRANSPORT SCREW:NOZZLE:CMY:ASS'Y

6.08050103
RETAINING RINGS
-E:SILENCER:DIA3

9.11050759
CLAMP:LWSM-0605A

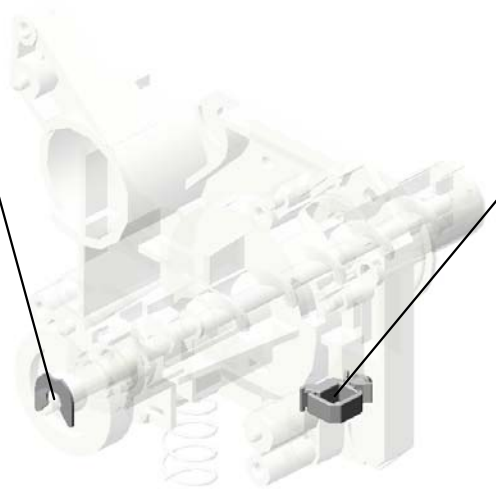

Copyright (c) 2006-2016 Ricoh Company, Ltd. 2016/07/29 Version 1.00

U007.PCDU

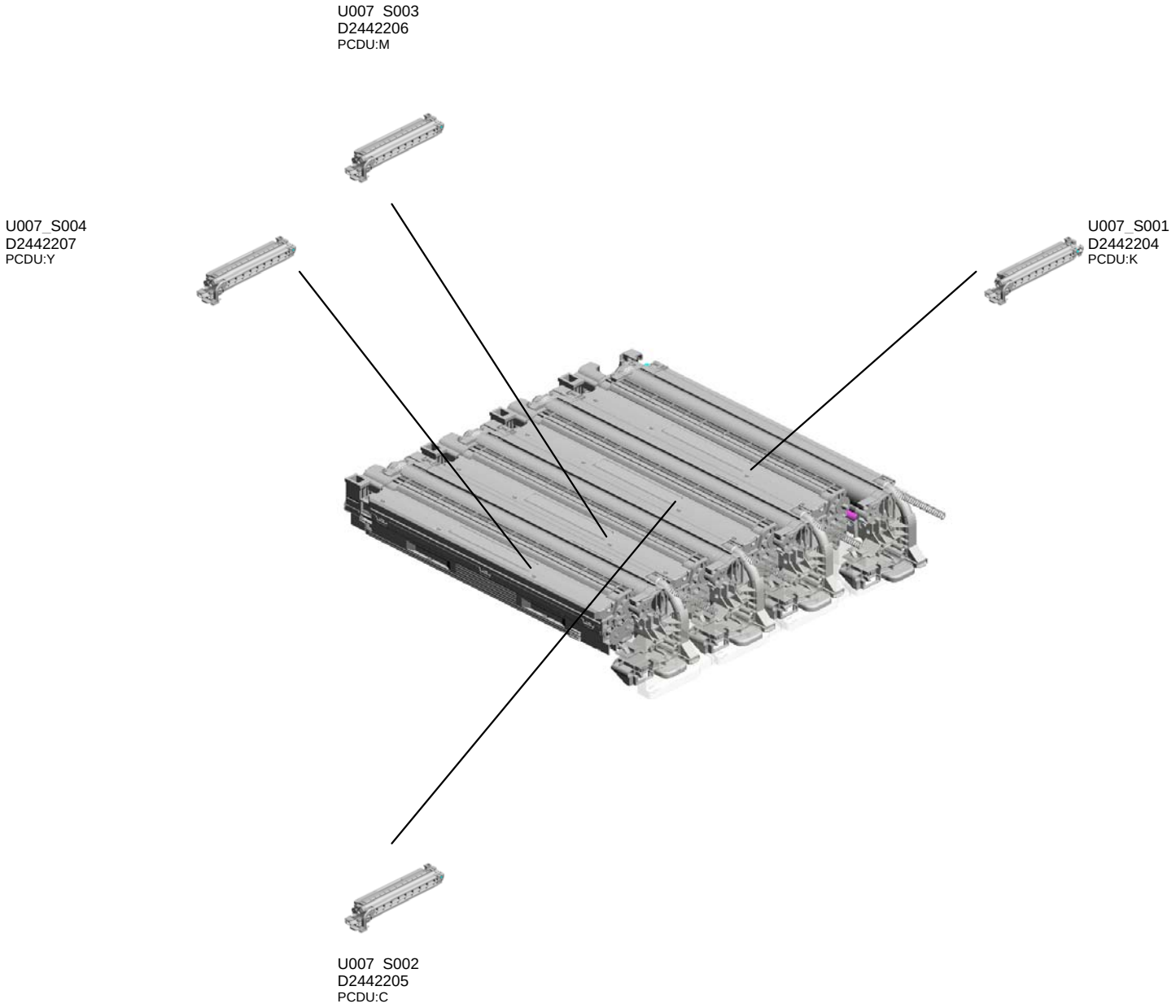

Copyright (c) 2006-2016 Ricoh Company, Ltd. 2016/07/29 Version 1.00

U007_S001.PCDU:K

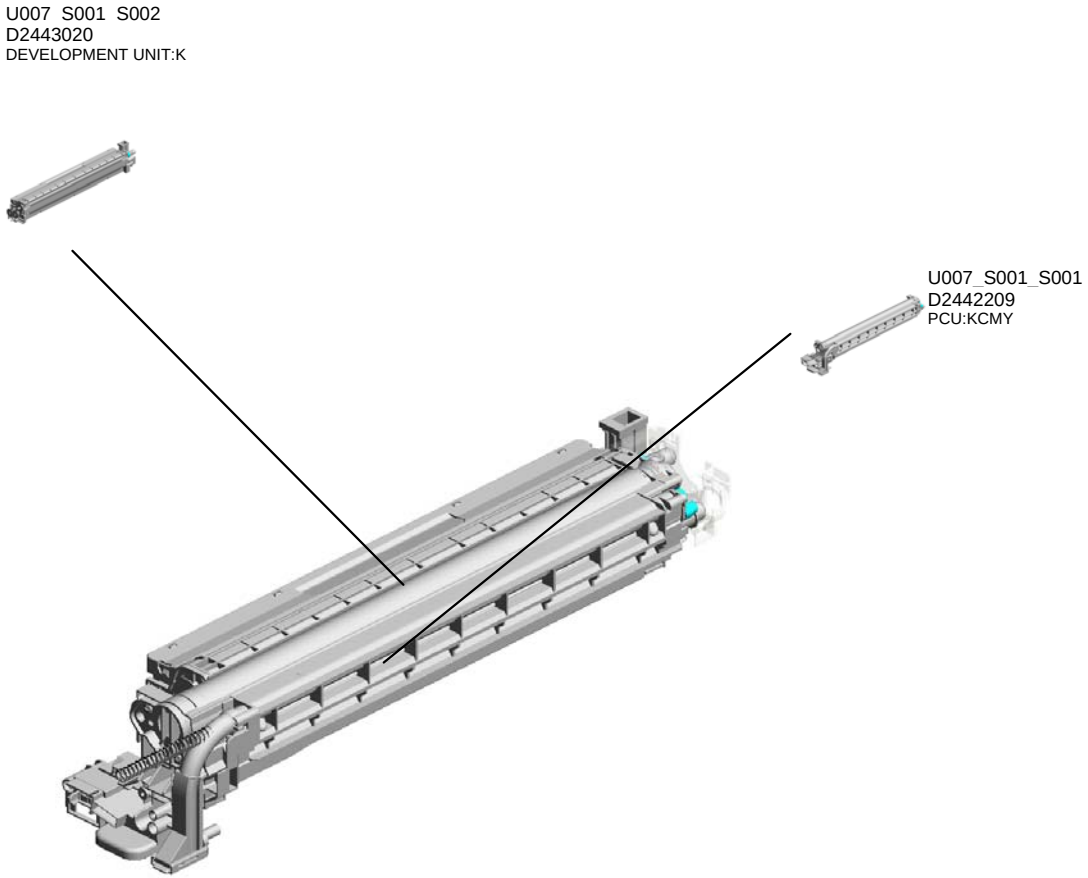

Copyright (c) 2006-2016 Ricoh Company, Ltd. 2016/07/29 Version 1.00

U007_S002.PCDU:C

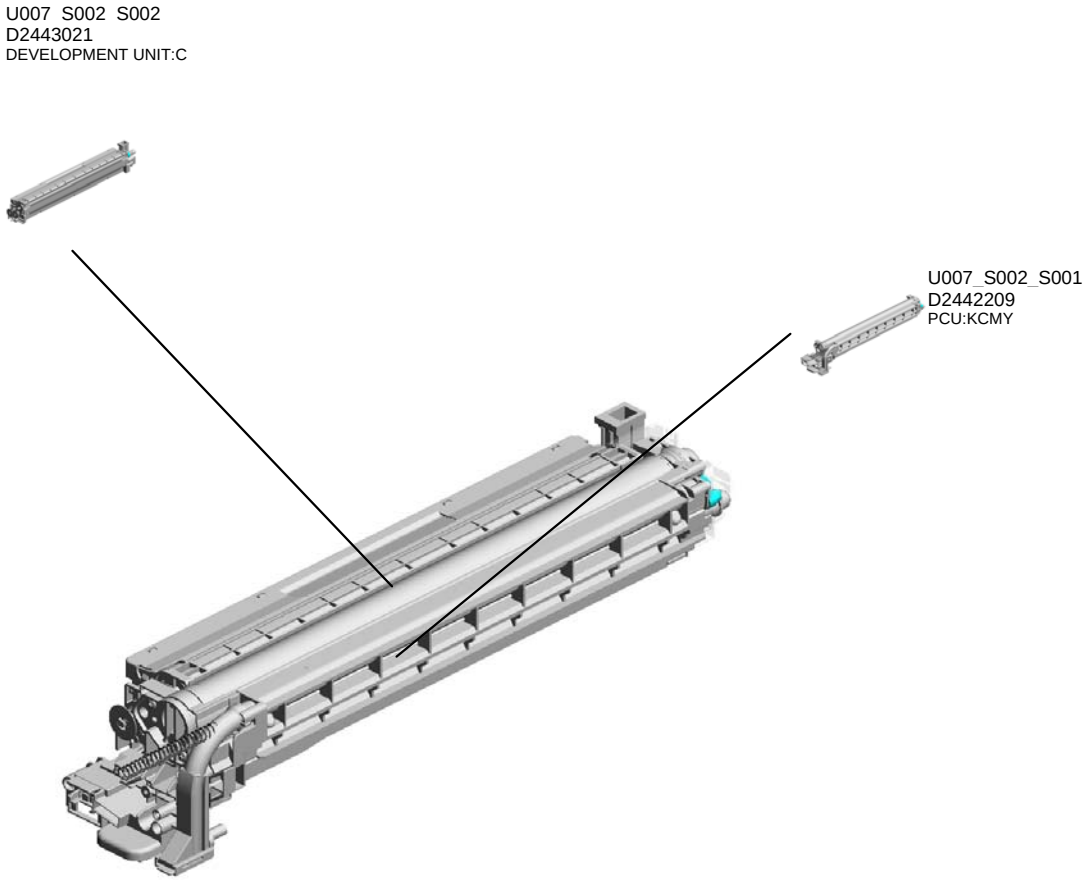

Copyright (c) 2006-2016 Ricoh Company, Ltd. 2016/07/29 Version 1.00

U007_S003.PCDU:M

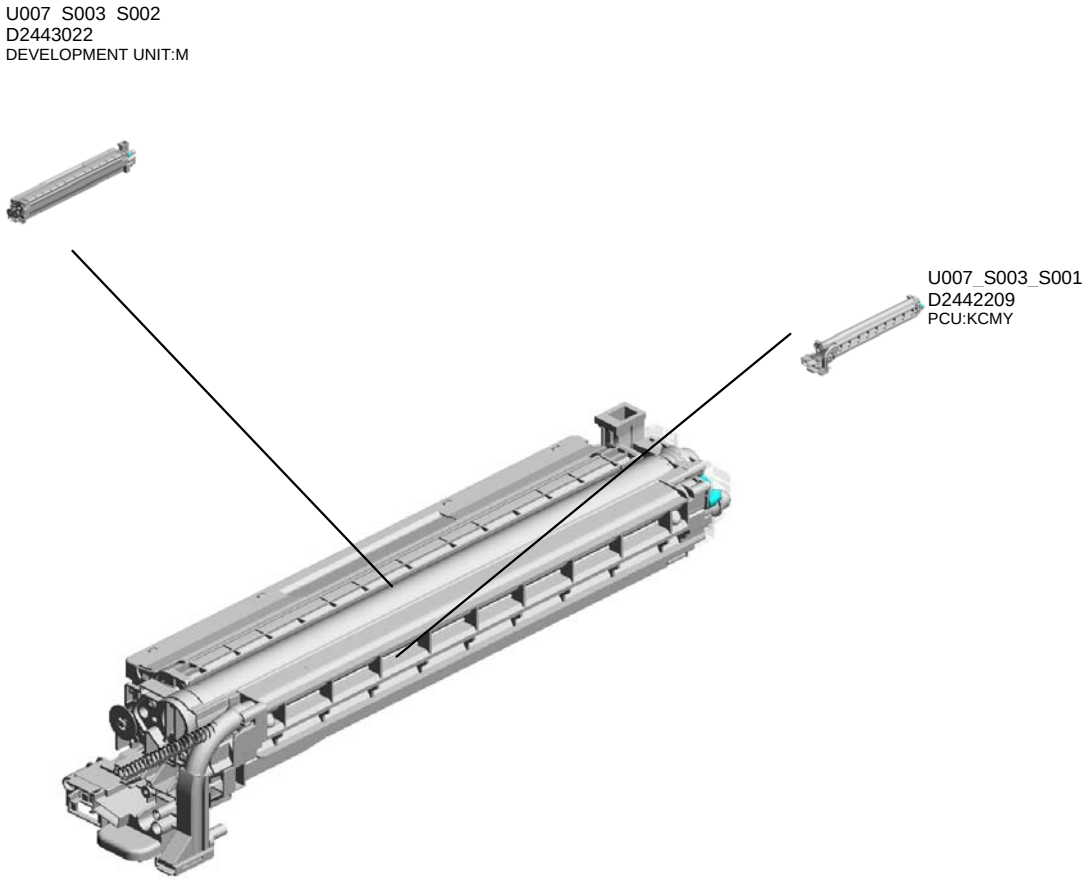

Copyright (c) 2006-2016 Ricoh Company, Ltd. 2016/07/29 Version 1.00

U007_S004.PCDU:Y

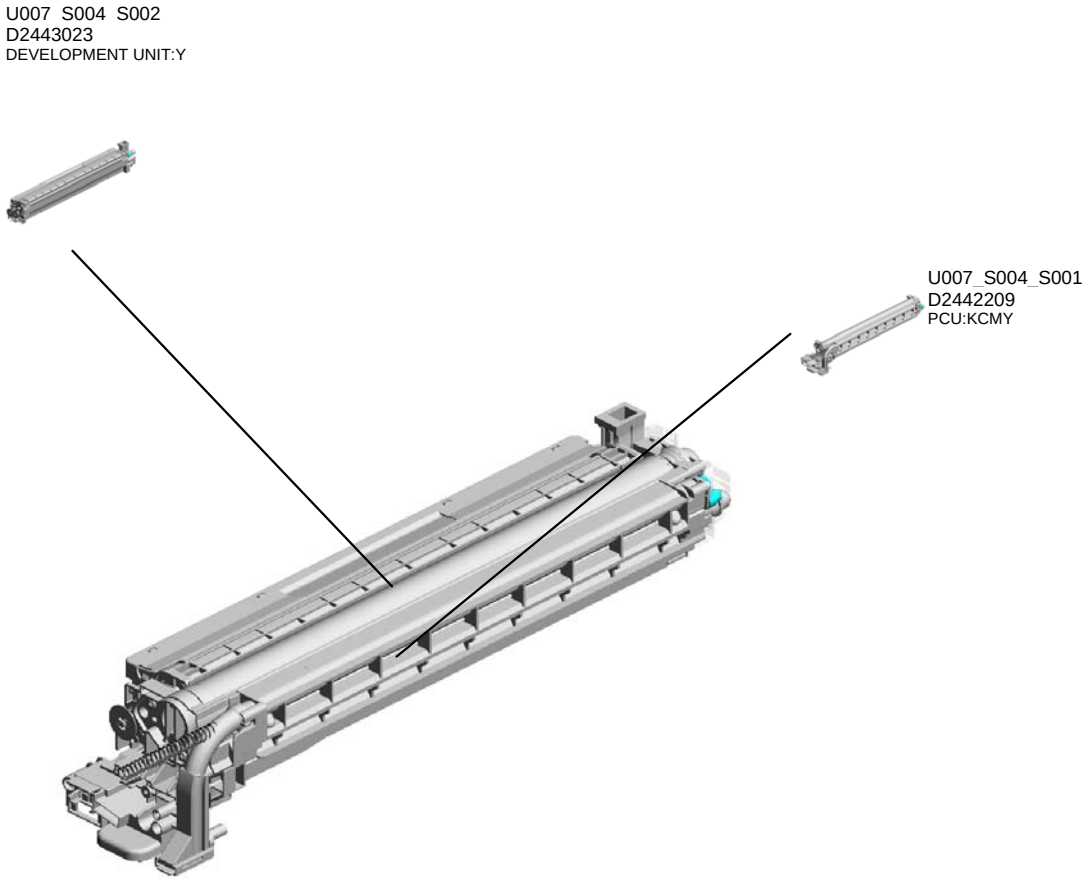

Copyright (c) 2006-2016 Ricoh Company, Ltd. 2016/07/29 Version 1.00

U007
PCDU

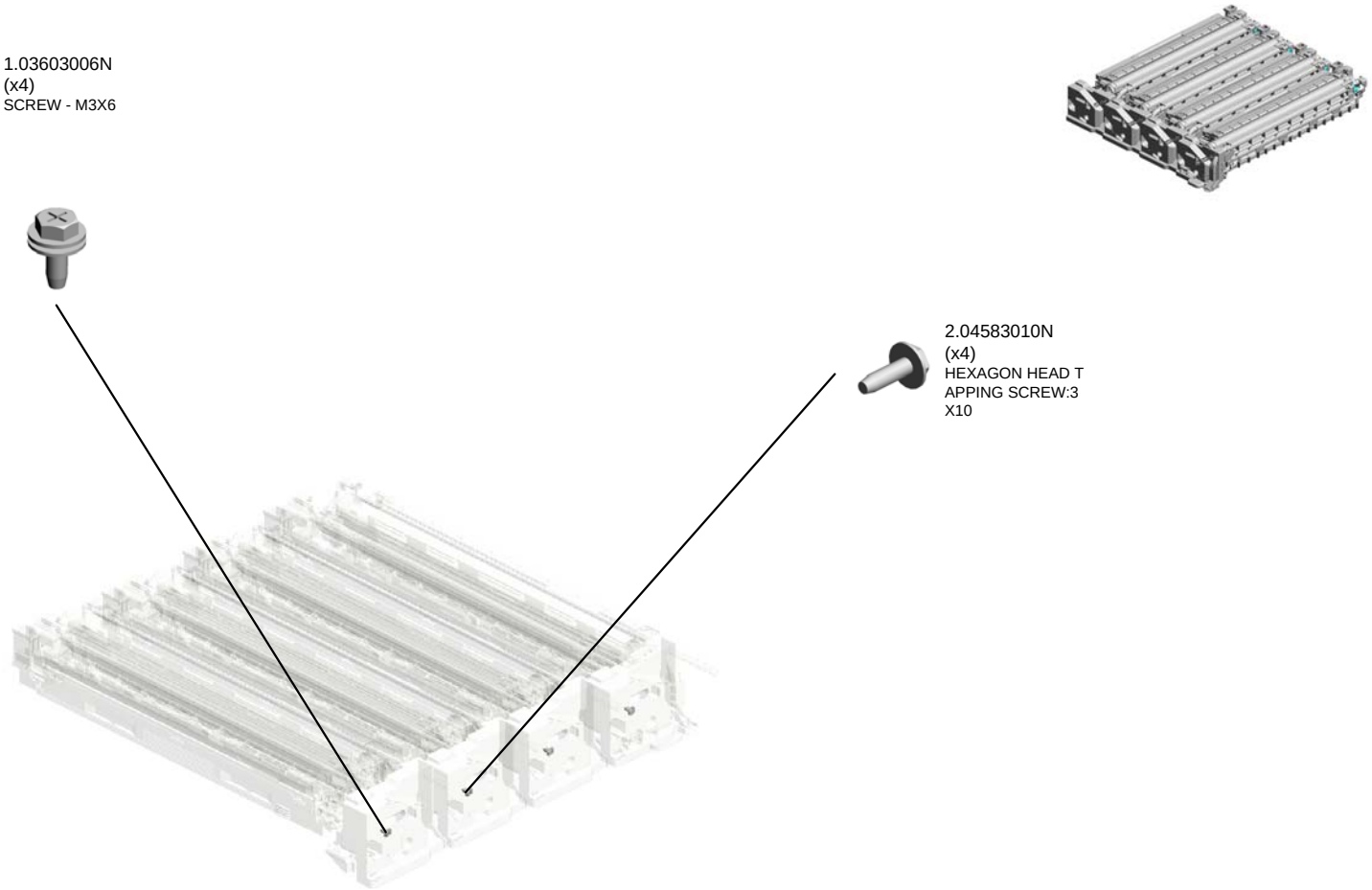

Copyright (c) 2006-2016 Ricoh Company, Ltd. 2016/07/29 Version 1.00

U007_S001
PCDU:K

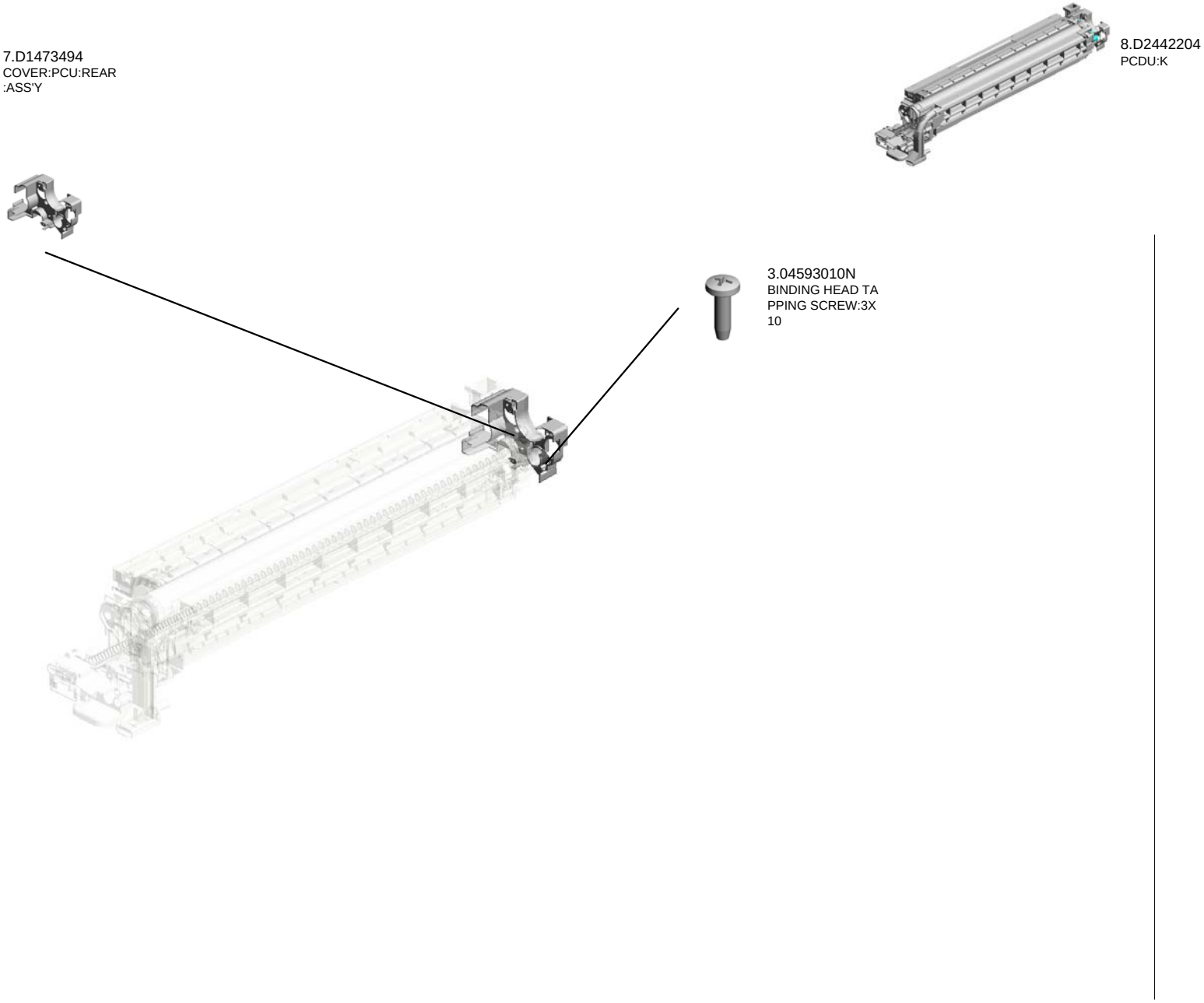

Copyright (c) 2006-2016 Ricoh Company, Ltd. 2016/07/29 Version 1.00

U007_S001_S001
PCU:KCMY

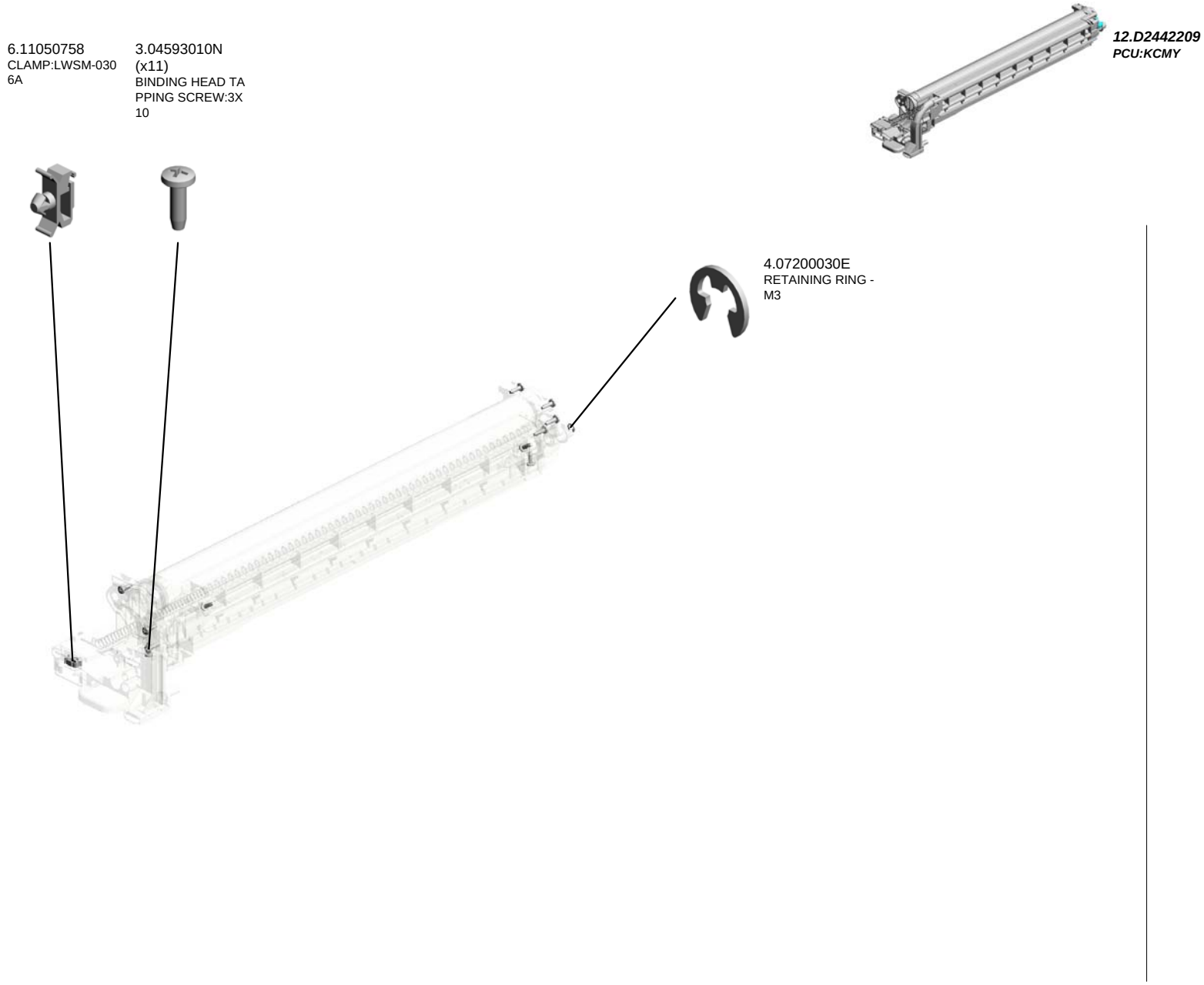

Copyright (c) 2006-2016 Ricoh Company, Ltd. 2016/07/29 Version 1.00

U007_S001_S002
DEVELOPMENT UNIT:K

13.D2443020
DEVELOPMENT UNIT:K

Copyright (c) 2006-2016 Ricoh Company, Ltd. 2016/07/29 Version 1.00

U007_S002
PCDU:C

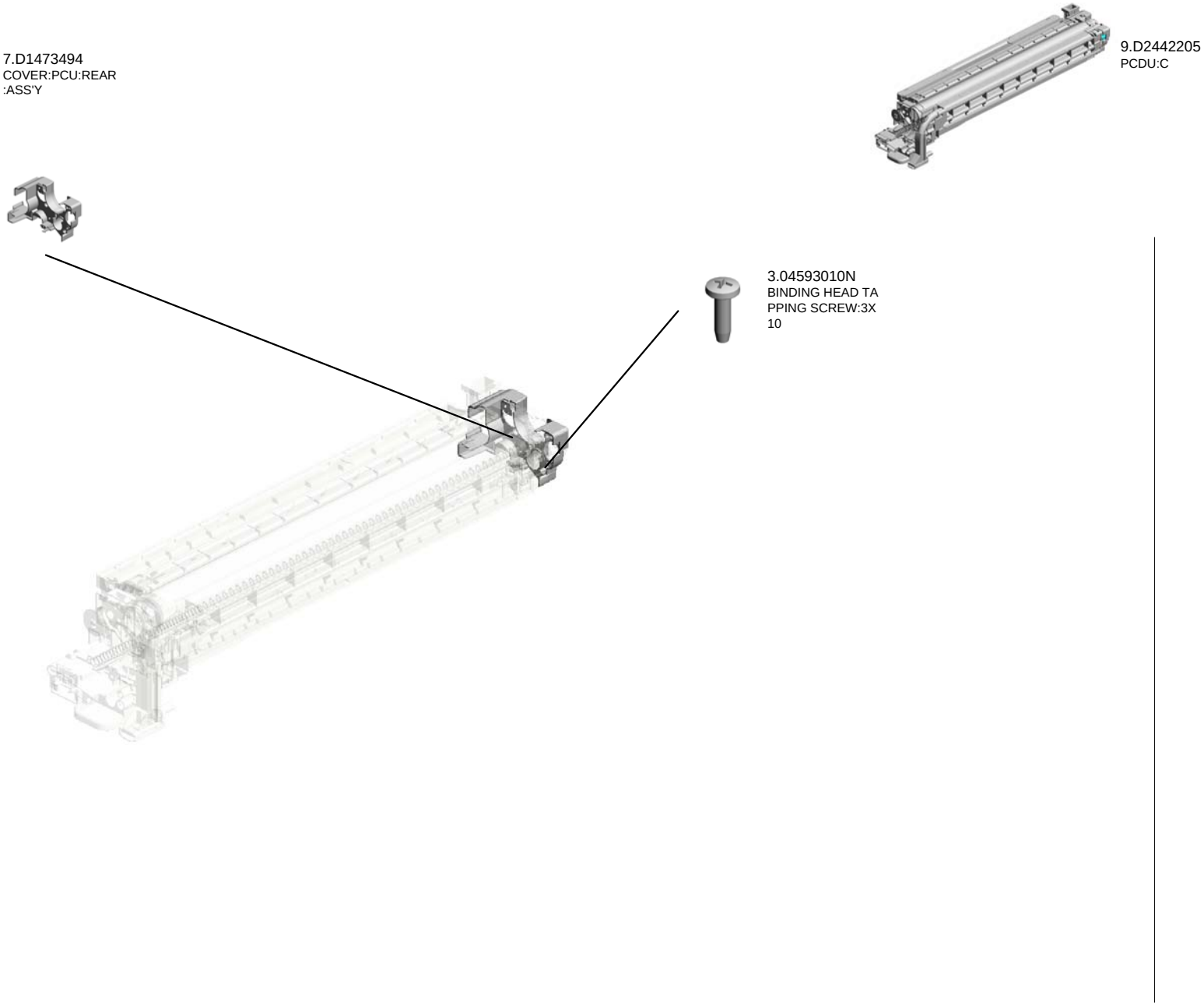

Copyright (c) 2006-2016 Ricoh Company, Ltd. 2016/07/29 Version 1.00

U007_S002_S001
PCU:KCMY

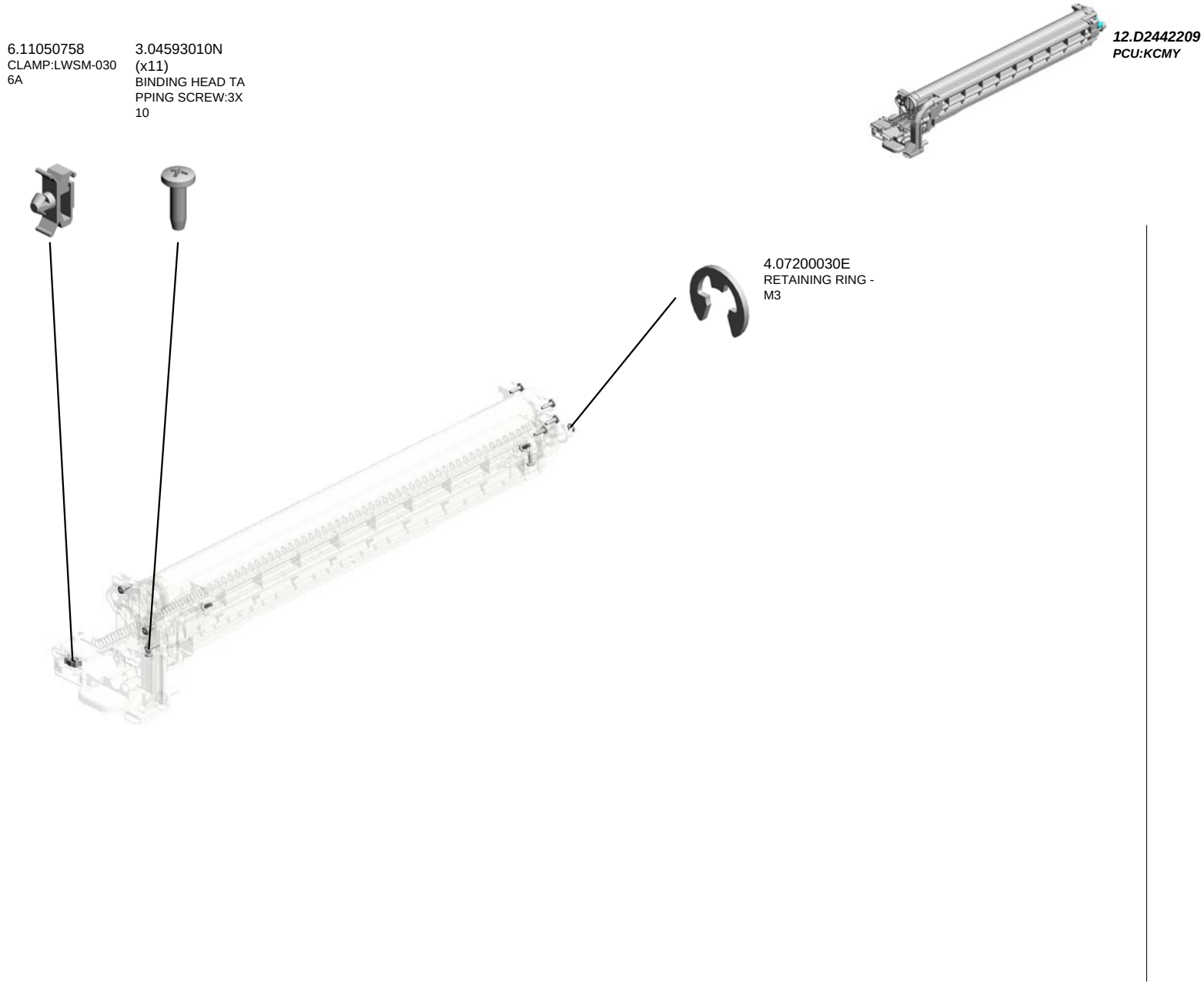

Copyright (c) 2006-2016 Ricoh Company, Ltd. 2016/07/29 Version 1.00

U007_S002_S002
DEVELOPMENT UNIT:C

14.D2443021
DEVELOPMENT UNIT:C

Copyright (c) 2006-2016 Ricoh Company, Ltd. 2016/07/29 Version 1.00

U007_S003
PCDU:M

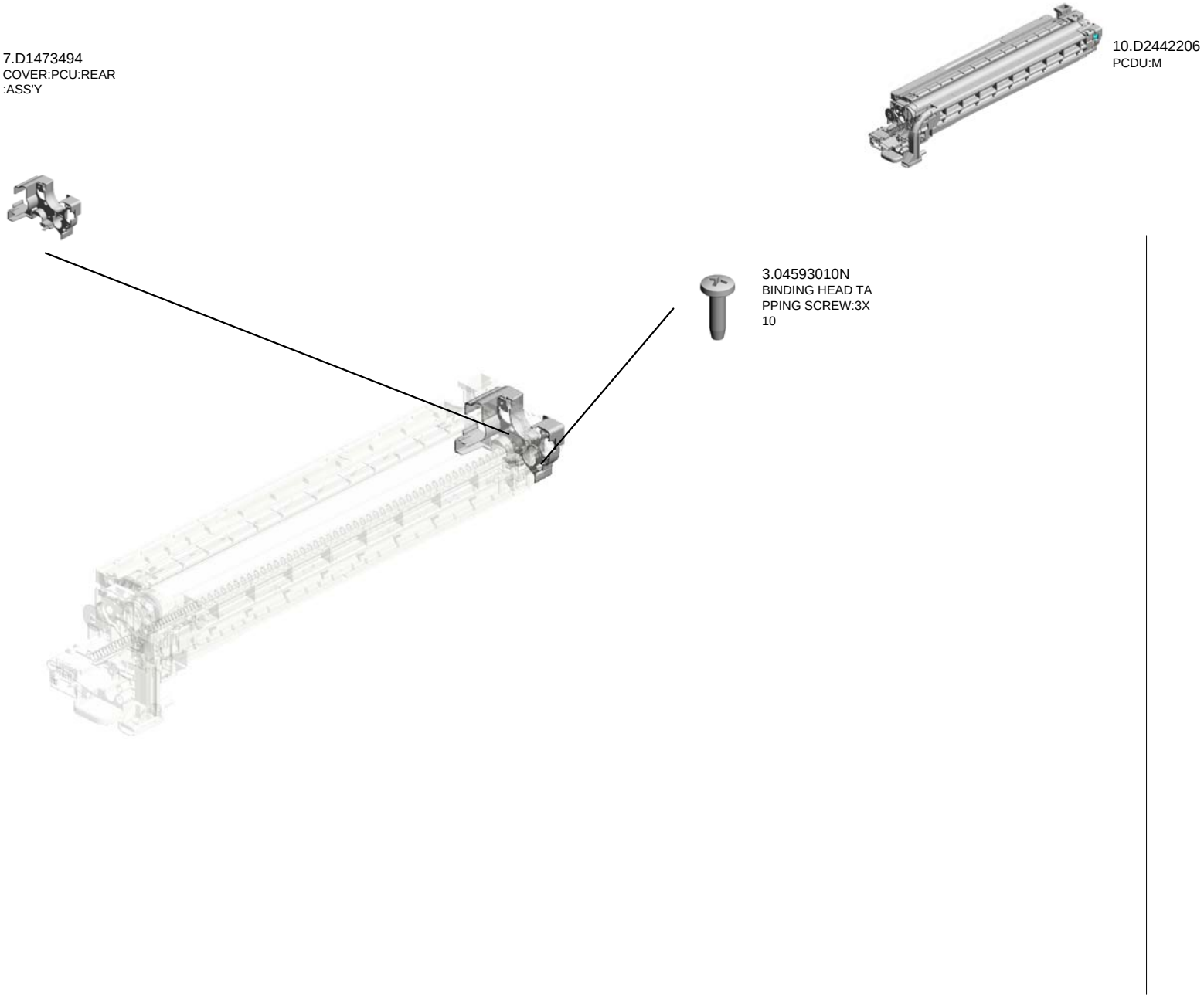

Copyright (c) 2006-2016 Ricoh Company, Ltd. 2016/07/29 Version 1.00

U007_S003_S001
PCU:KCMY

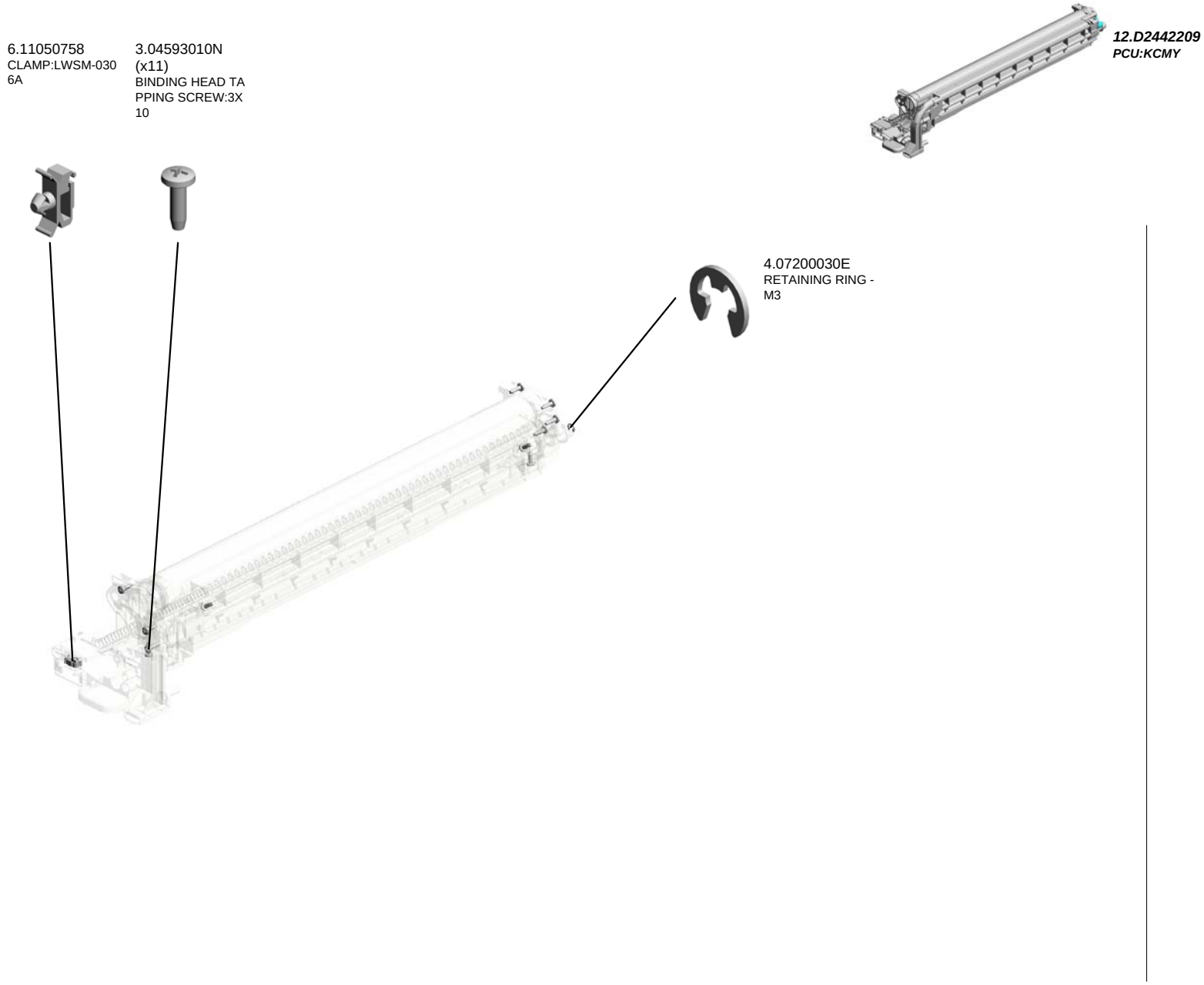

Copyright (c) 2006-2016 Ricoh Company, Ltd. 2016/07/29 Version 1.00

U007_S003_S002
DEVELOPMENT UNIT:M

15.D2443022
DEVELOPMENT UNIT:M

Copyright (c) 2006-2016 Ricoh Company, Ltd. 2016/07/29 Version 1.00

U007_S004
PCDU:Y

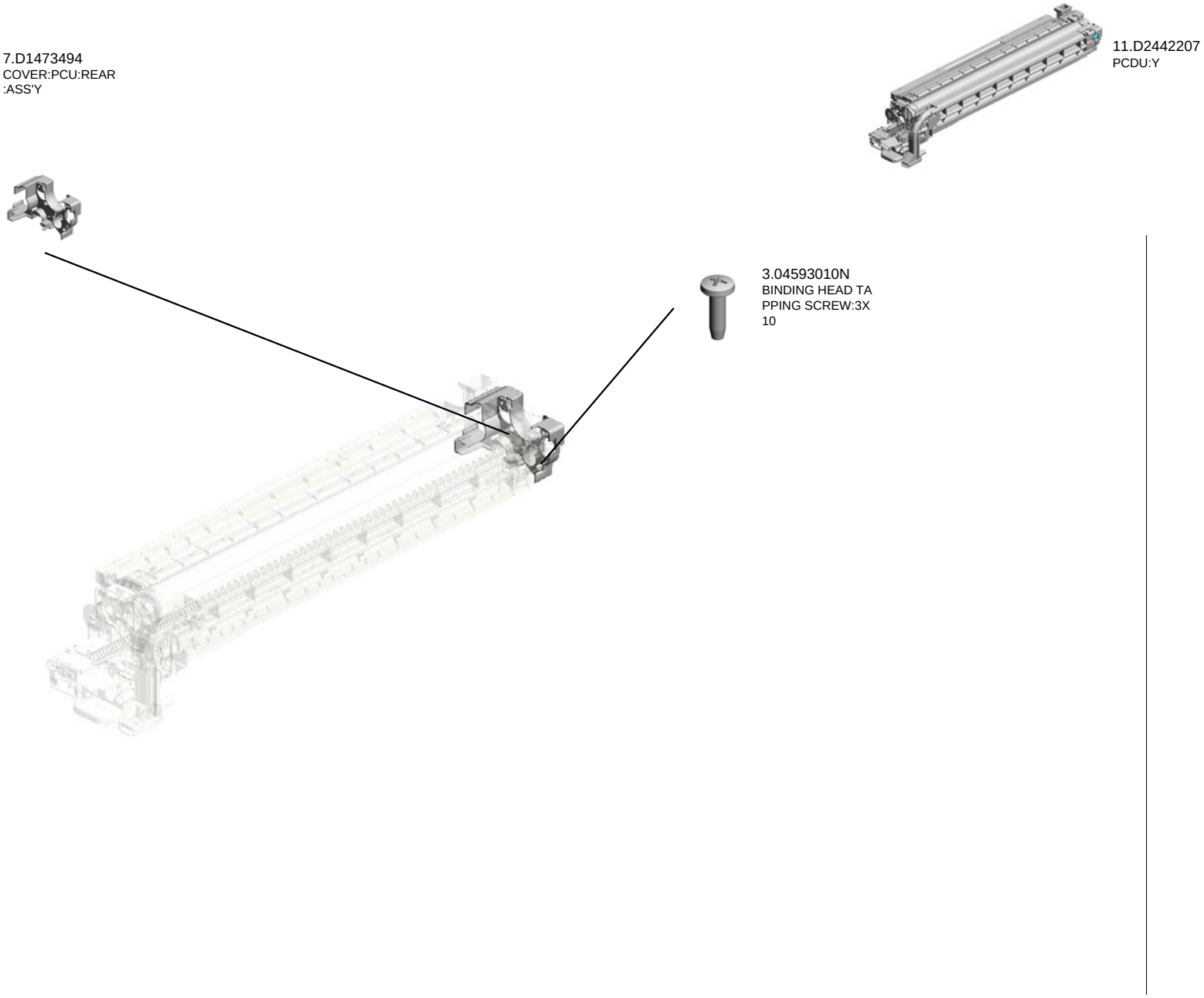

Copyright (c) 2006-2016 Ricoh Company, Ltd. 2016/07/29 Version 1.00

U007_S004_S001
PCU:KCMY

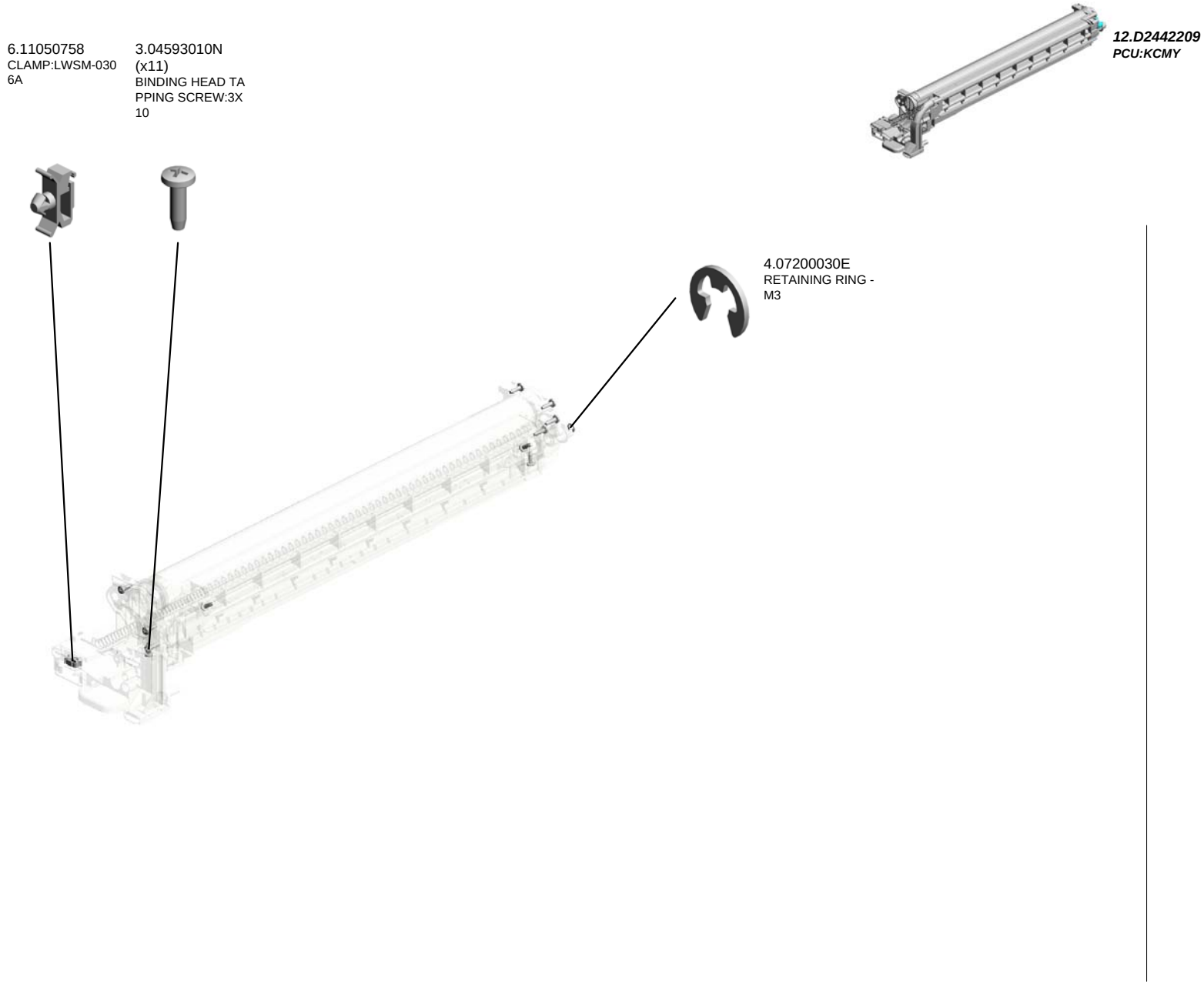

Copyright (c) 2006-2016 Ricoh Company, Ltd. 2016/07/29 Version 1.00

U007_S004_S002
DEVELOPMENT UNIT:Y

16.D2443023
DEVELOPMENT UNIT:Y

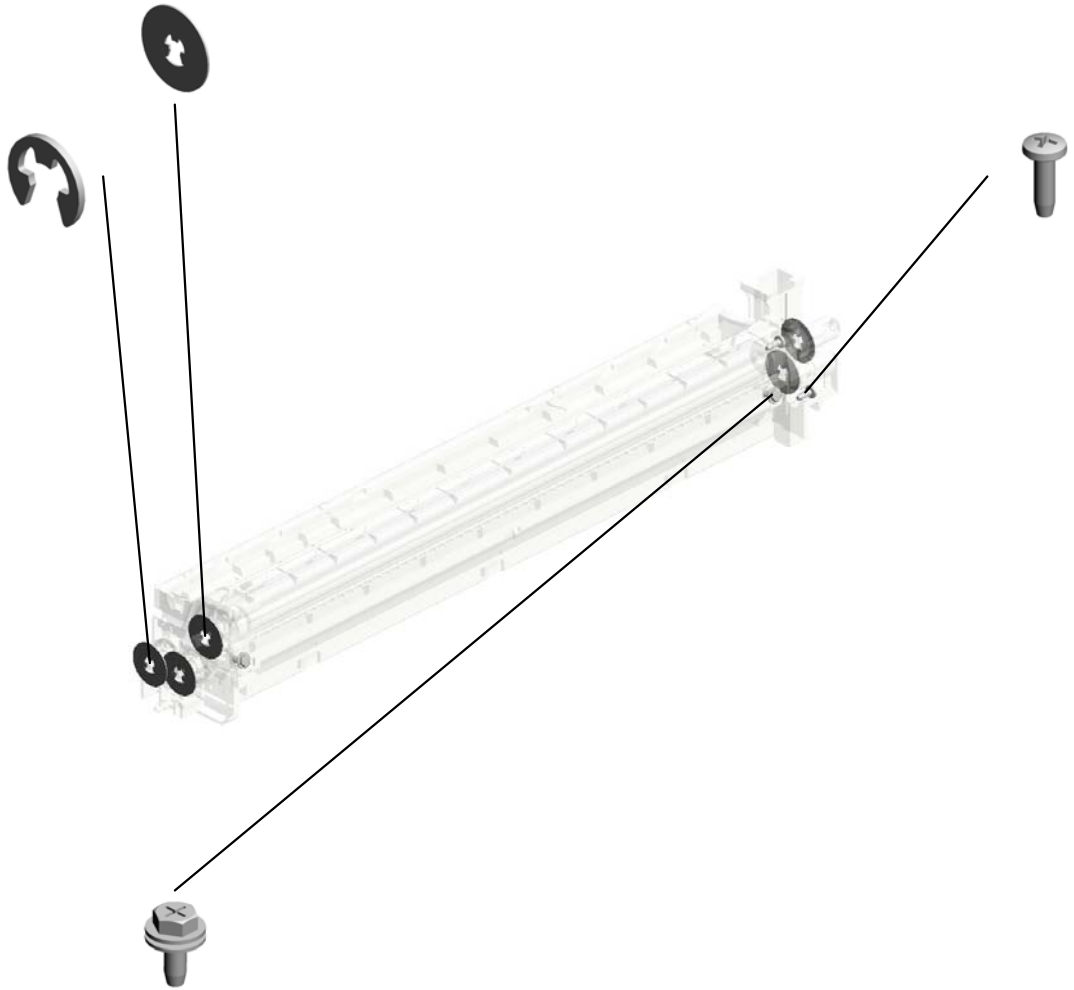

Copyright (c) 2006-2016 Ricoh Company, Ltd. 2016/07/29 Version 1.00

U008.ITB UNIT

U008_S001
D2416001
TRANSFER UNIT:INTERMEDIATE TRANSFER:ASS'Y

U008_S003
D2416141
CLEANING UNIT:BELT CLEANING:ASS'Y

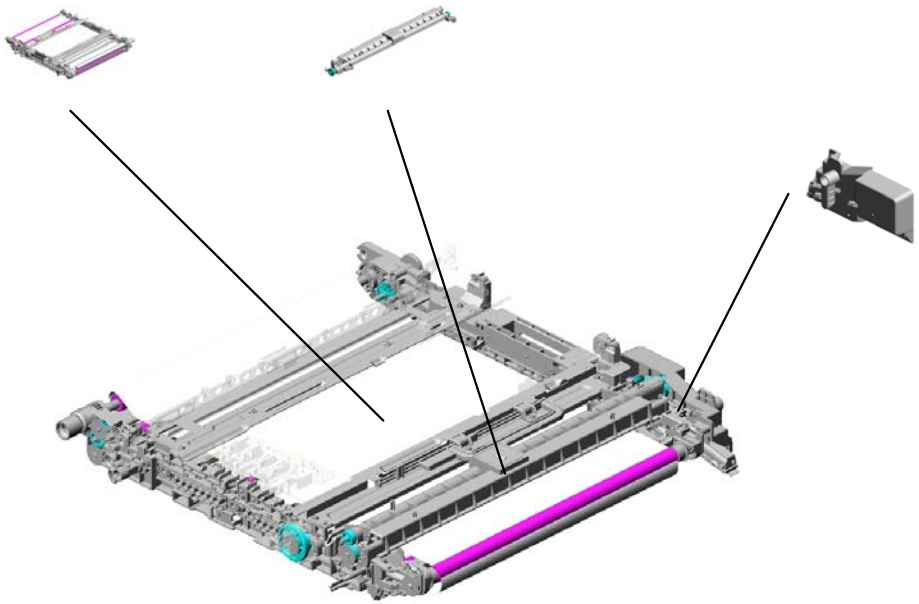

U008_S002
D1496370
TONER OUTLET UNIT:BELT CLEANING:ASS'Y

Copyright (c) 2006-2016 Ricoh Company, Ltd. 2016/07/29 Version 1.00

U008
ITB UNIT

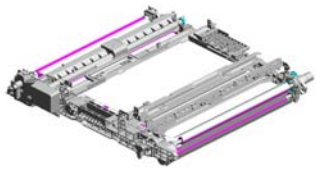

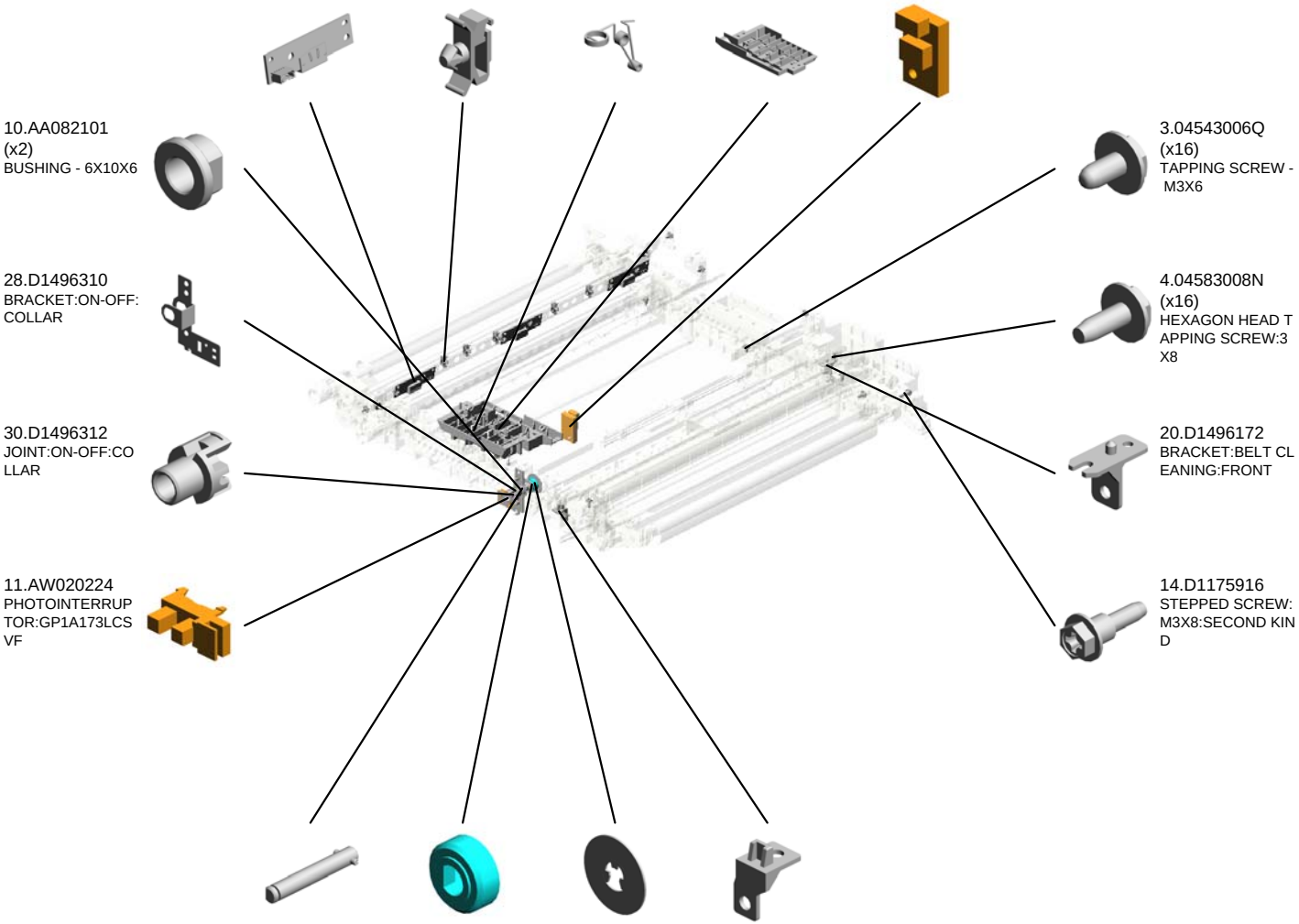

Copyright (c) 2006-2016 Ricoh Company, Ltd. 2016/07/29 Version 1.00

U008_S001
TRANSFER UNIT:INTERMEDIATE TRANSFER:ASS'Y

35.D2416001
TRANSFER UNIT:INTERMEDIATE TRANSFER:ASS'Y

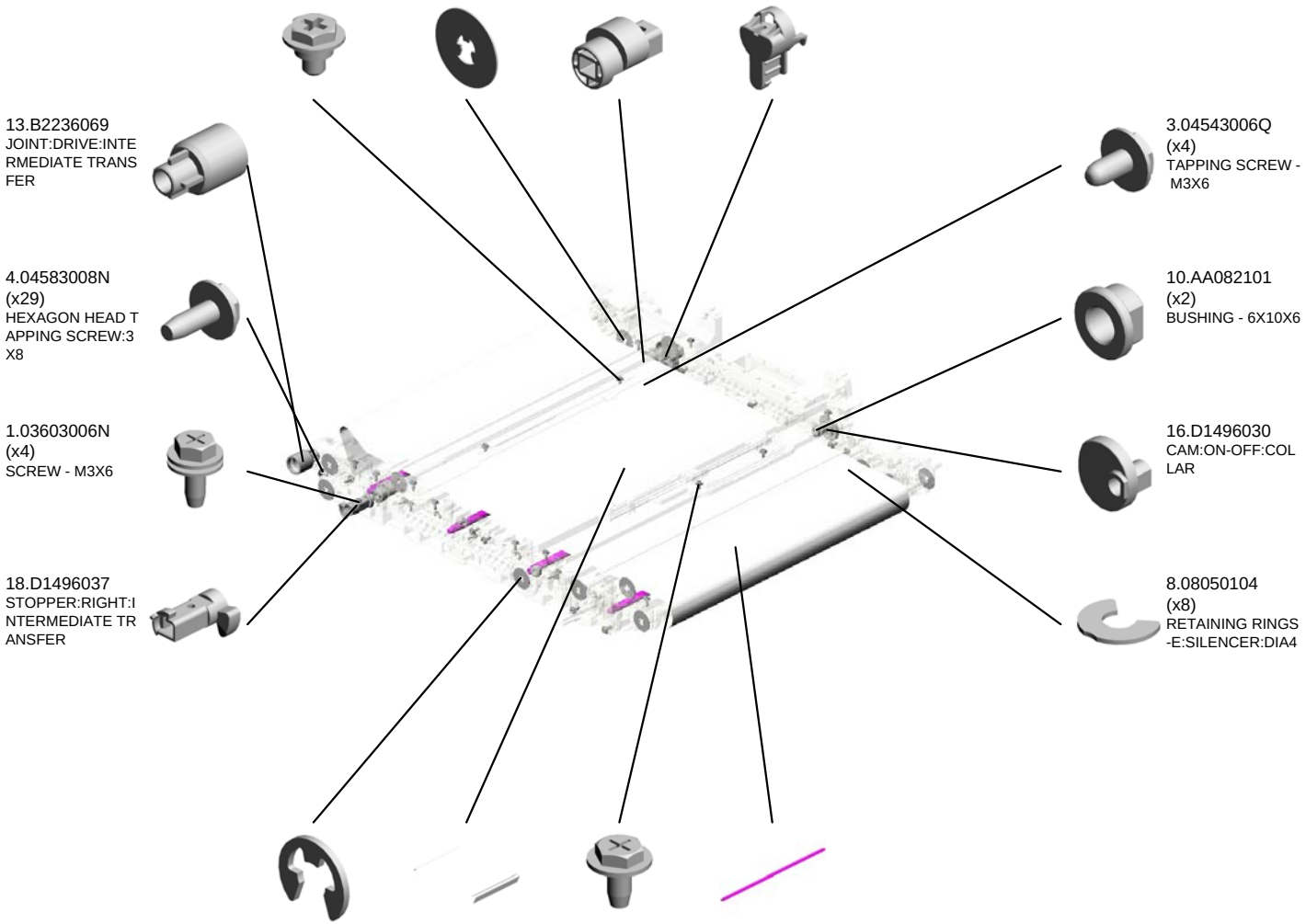

Copyright (c) 2006-2016 Ricoh Company, Ltd. 2016/07/29 Version 1.00

U008_S002
TONER OUTLET UNIT:BELT CLEANING:ASS'Y

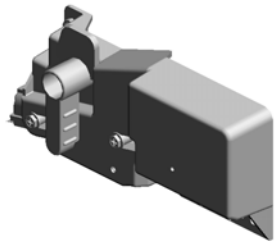

34.D1496370
TONER OUTLET UNIT:BELT CLEANING:ASS'Y

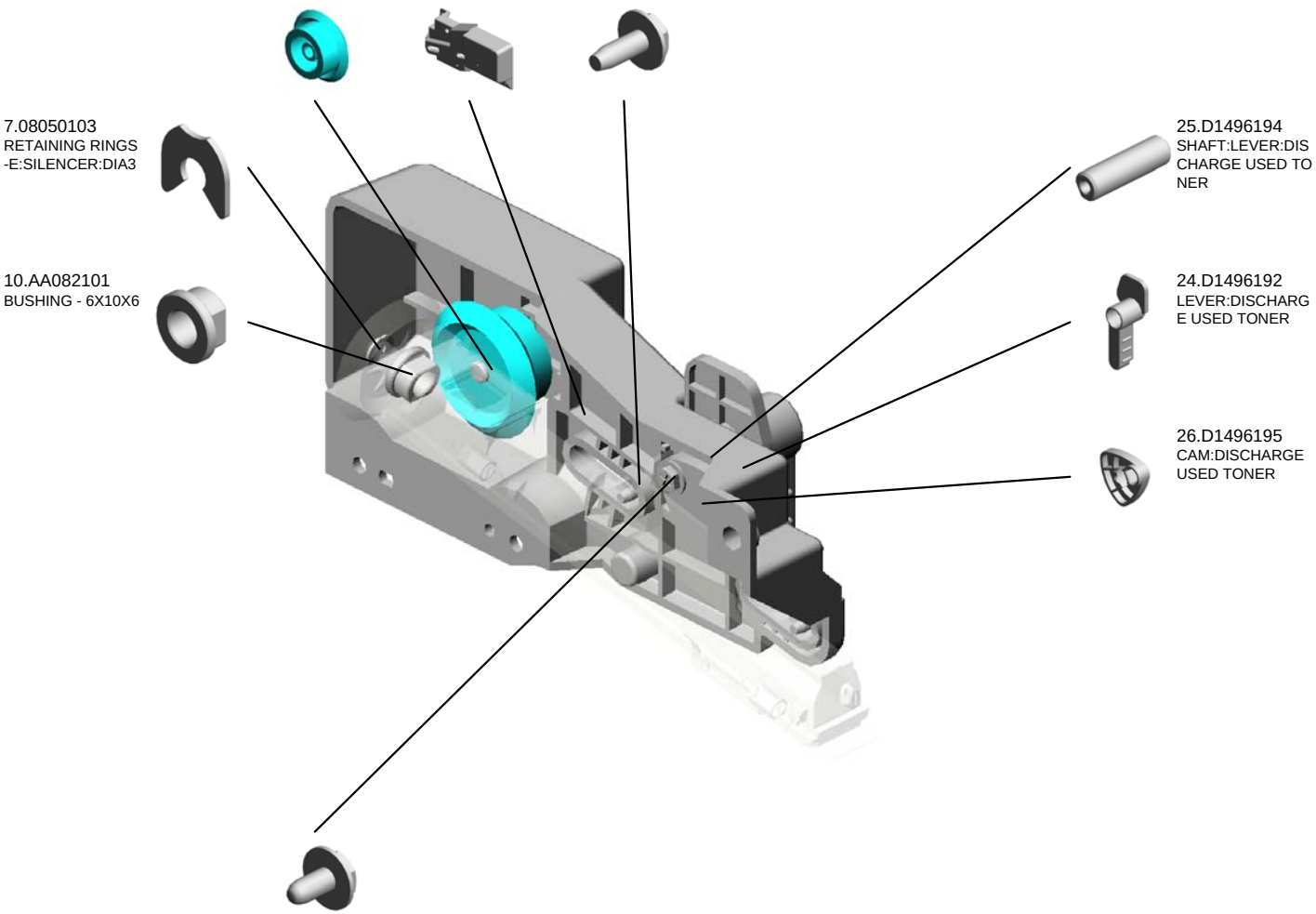

Copyright (c) 2006-2016 Ricoh Company, Ltd. 2016/07/29 Version 1.00

U008_S003
CLEANING UNIT:BELT CLEANING:ASS'Y

37.D2416141
CLEANING UNIT:BELT CLEANING:ASS'Y

4.04583008N
(x2)
HEXAGON HEAD TAPPING SCREW:3X8

10.AA082101
(x2)
BUSHING - 6X10X6

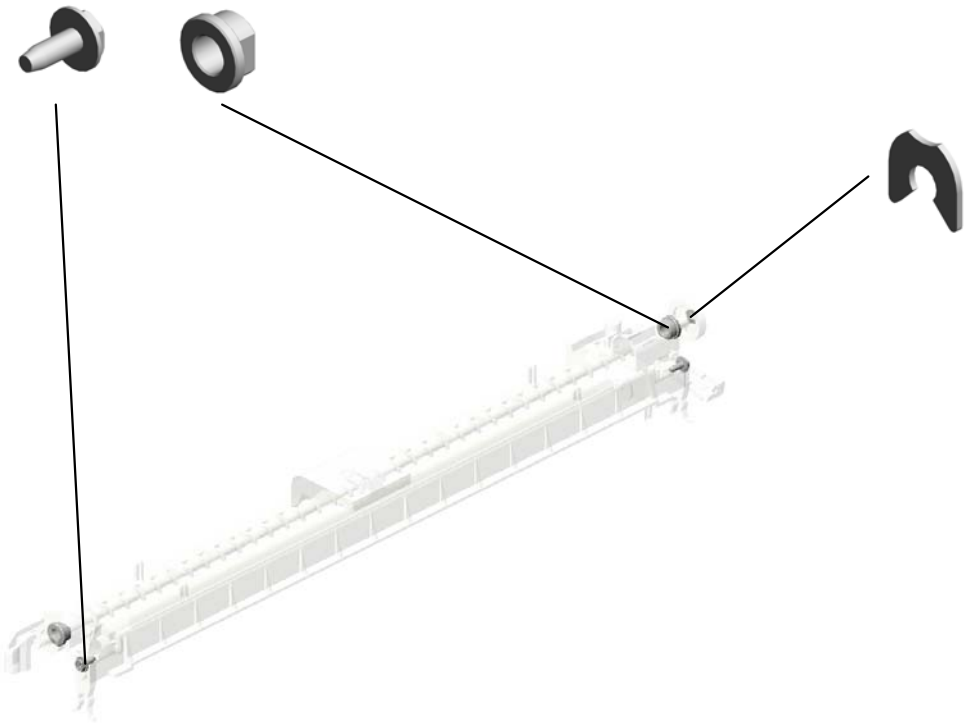

7.08050103
RETAINING RINGS -E:SILENCER:DIA3

Copyright (c) 2006-2016 Ricoh Company, Ltd. 2016/07/29 Version 1.00

U009.USED TONER

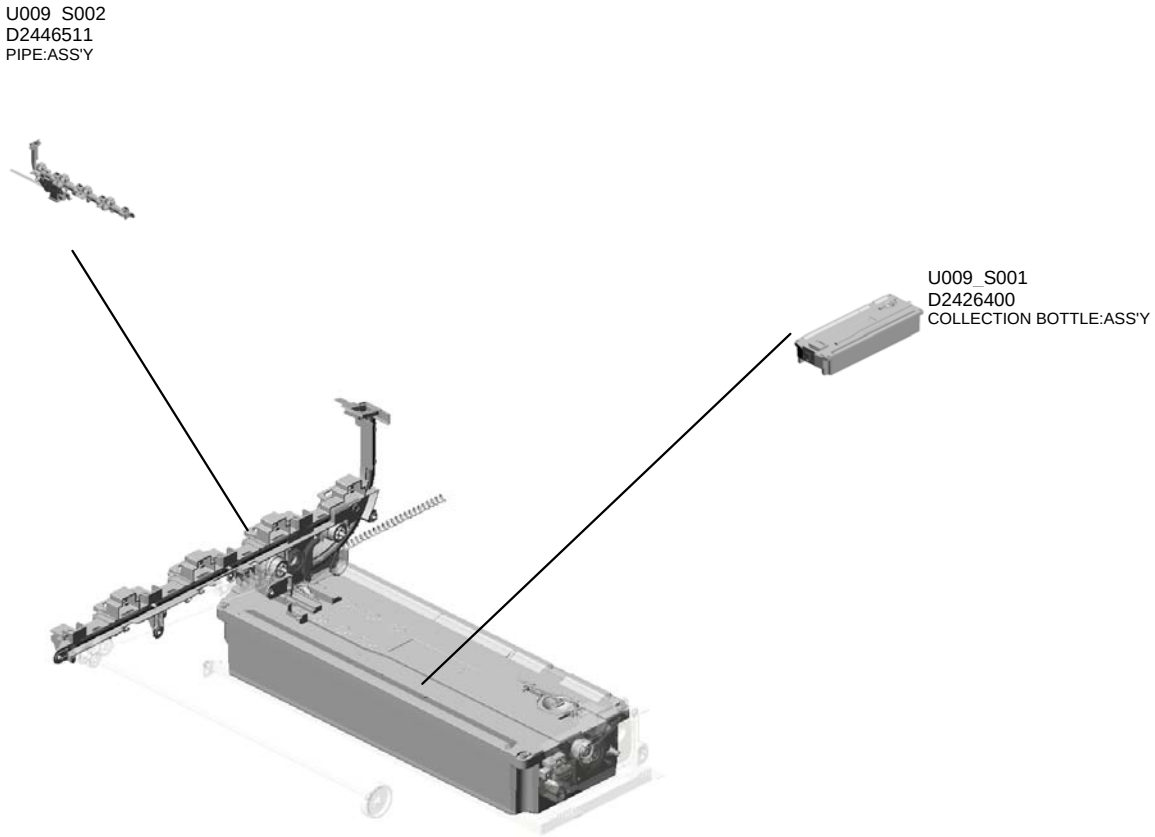

Copyright (c) 2006-2016 Ricoh Company, Ltd. 2016/07/29 Version 1.00

U009
USED TONER

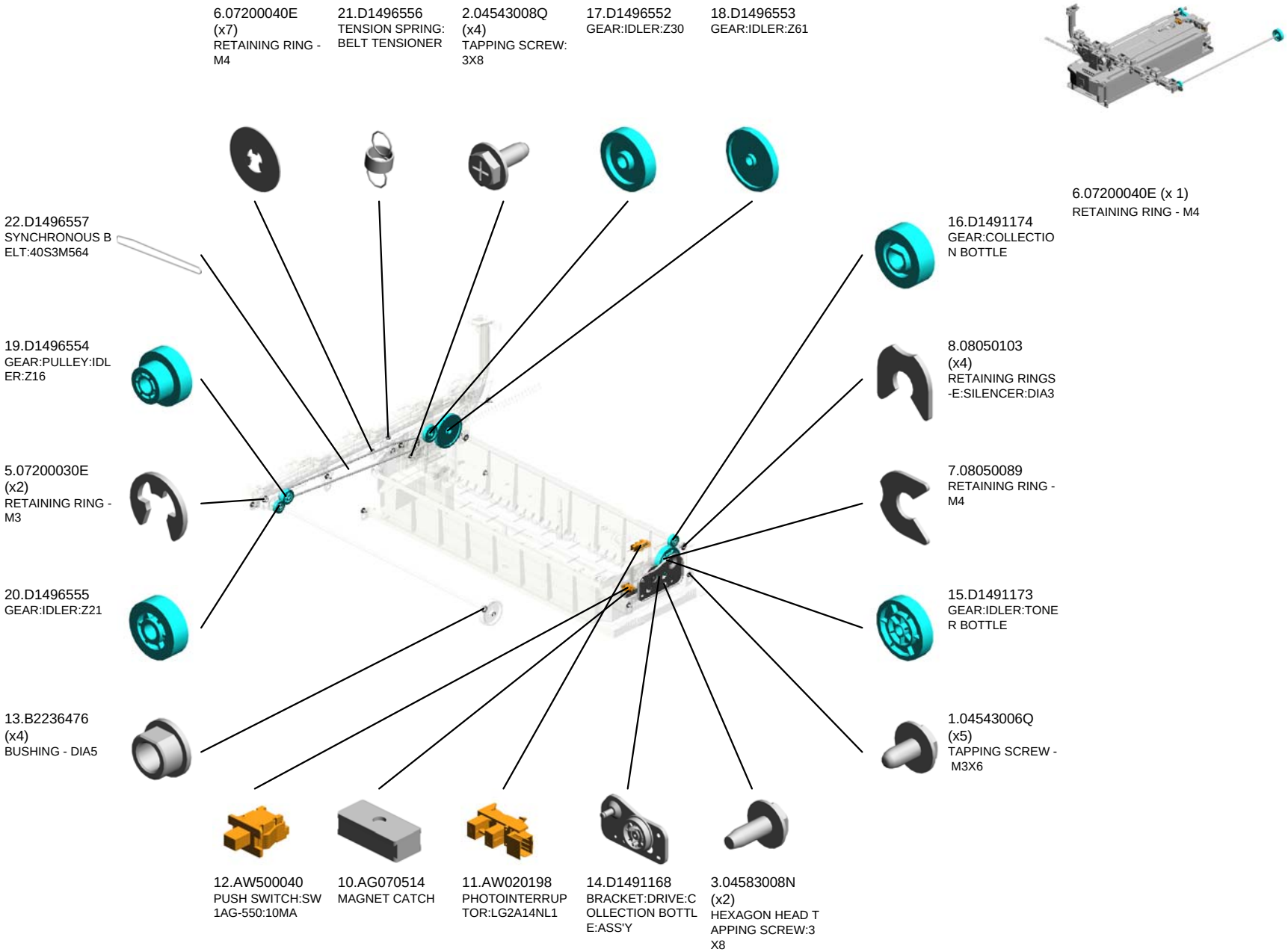

Copyright (c) 2006-2016 Ricoh Company, Ltd. 2016/07/29 Version 1.00

U009
USED TONER

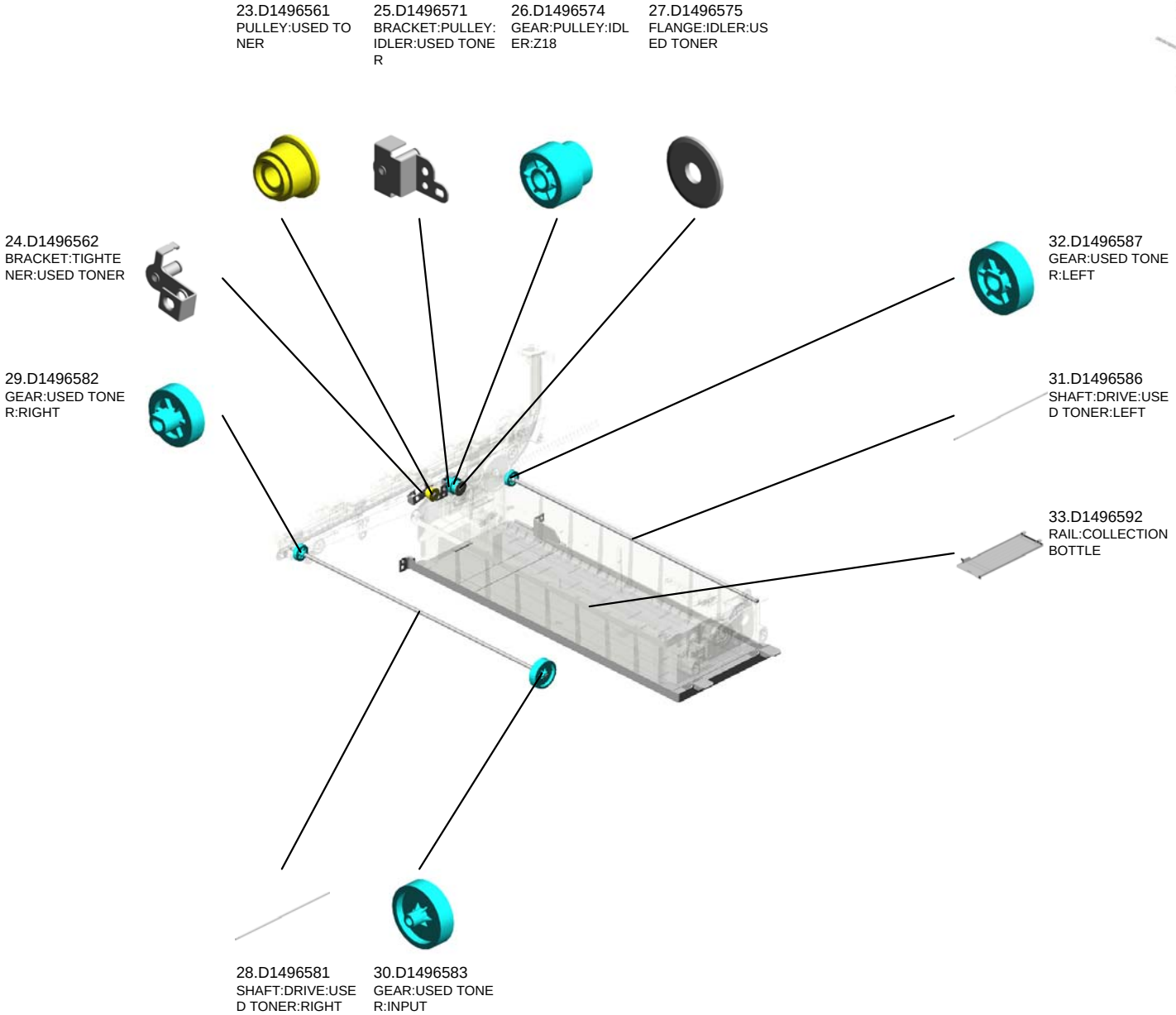

Copyright (c) 2006-2016 Ricoh Company, Ltd. 2016/07/29 Version 1.00

U009_S001
COLLECTION BOTTLE:ASS'Y

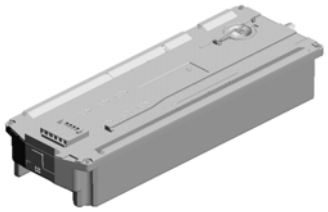

34.D2426400
COLLECTION BOTTLE:ASS'Y

4.04583010N
(x5)
HEXAGON HEAD TAPPING SCREW:3X10

9.AA080346
(x2)
BUSHING:FLANGE TYPE:DIA6

35.D2426432
FEELER:COLLECTION BOTTLE

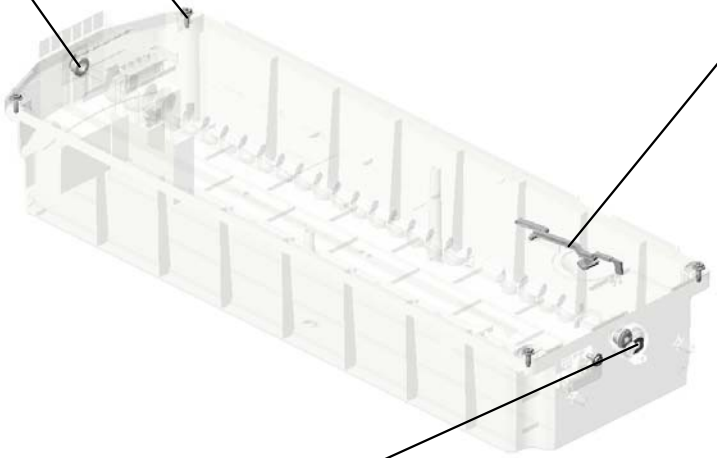

7.08050089
(x3)
RETAINING RING - M4

Copyright (c) 2006-2016 Ricoh Company, Ltd. 2016/07/29 Version 1.00

U009_S002
PIPE:ASS'Y

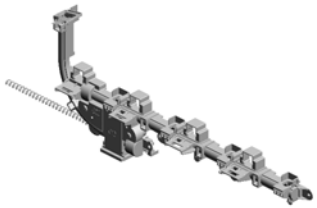

36.D2446511
PIPE:ASS'Y

4.04583010N
(x4)
HEXAGON HEAD T
APPING SCREW:3
X10

6.07200040E
(x4)
RETAINING RING -
M4

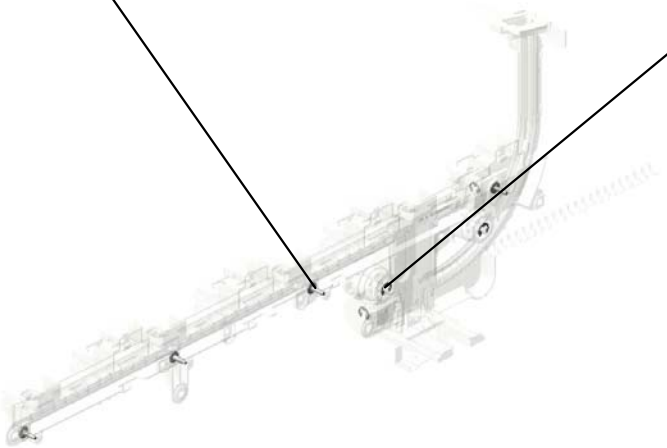

Copyright (c) 2006-2016 Ricoh Company, Ltd. 2016/07/29 Version 1.00

U010.SEPARATION/TRANSPORT

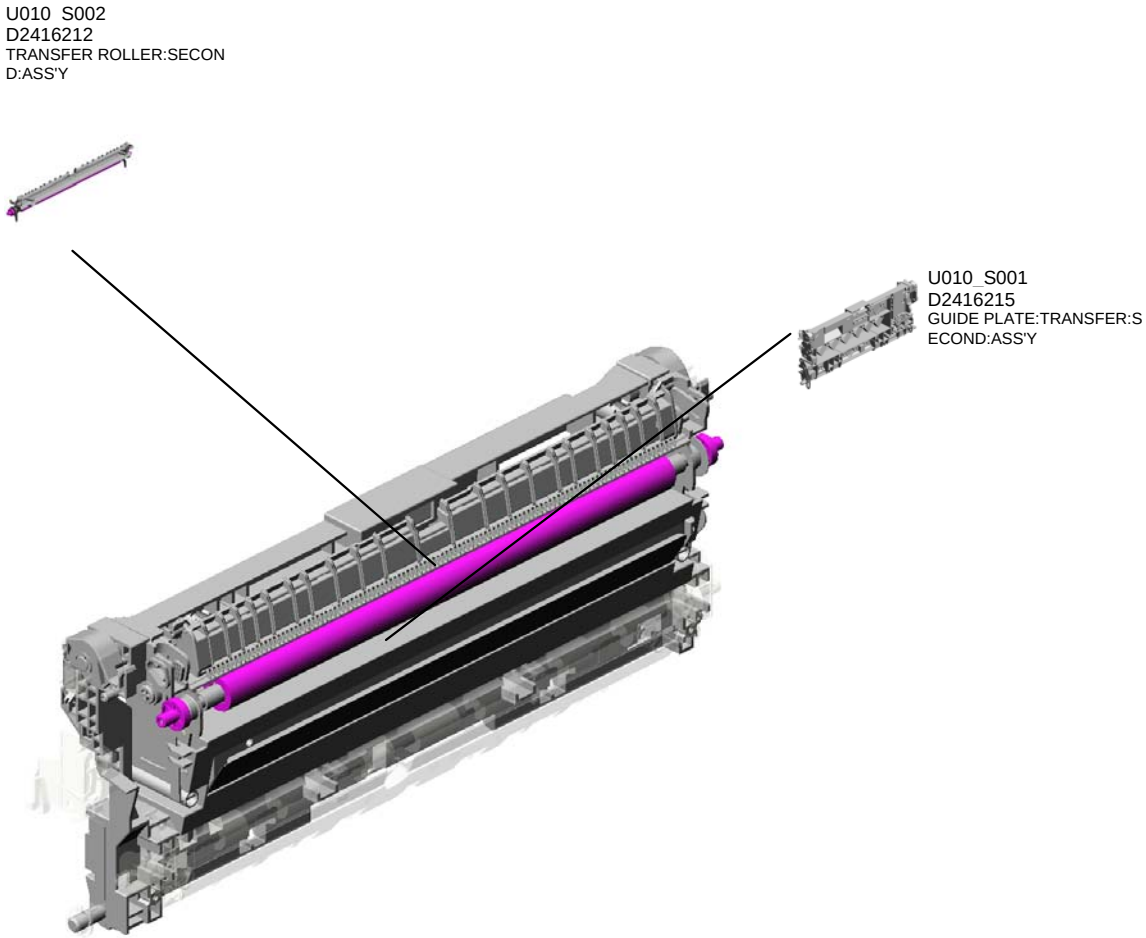

Copyright (c) 2006-2016 Ricoh Company, Ltd. 2016/07/29 Version 1.00

U010_S001.GUIDE PLATE:TRANSFER:SECOND:ASS'Y

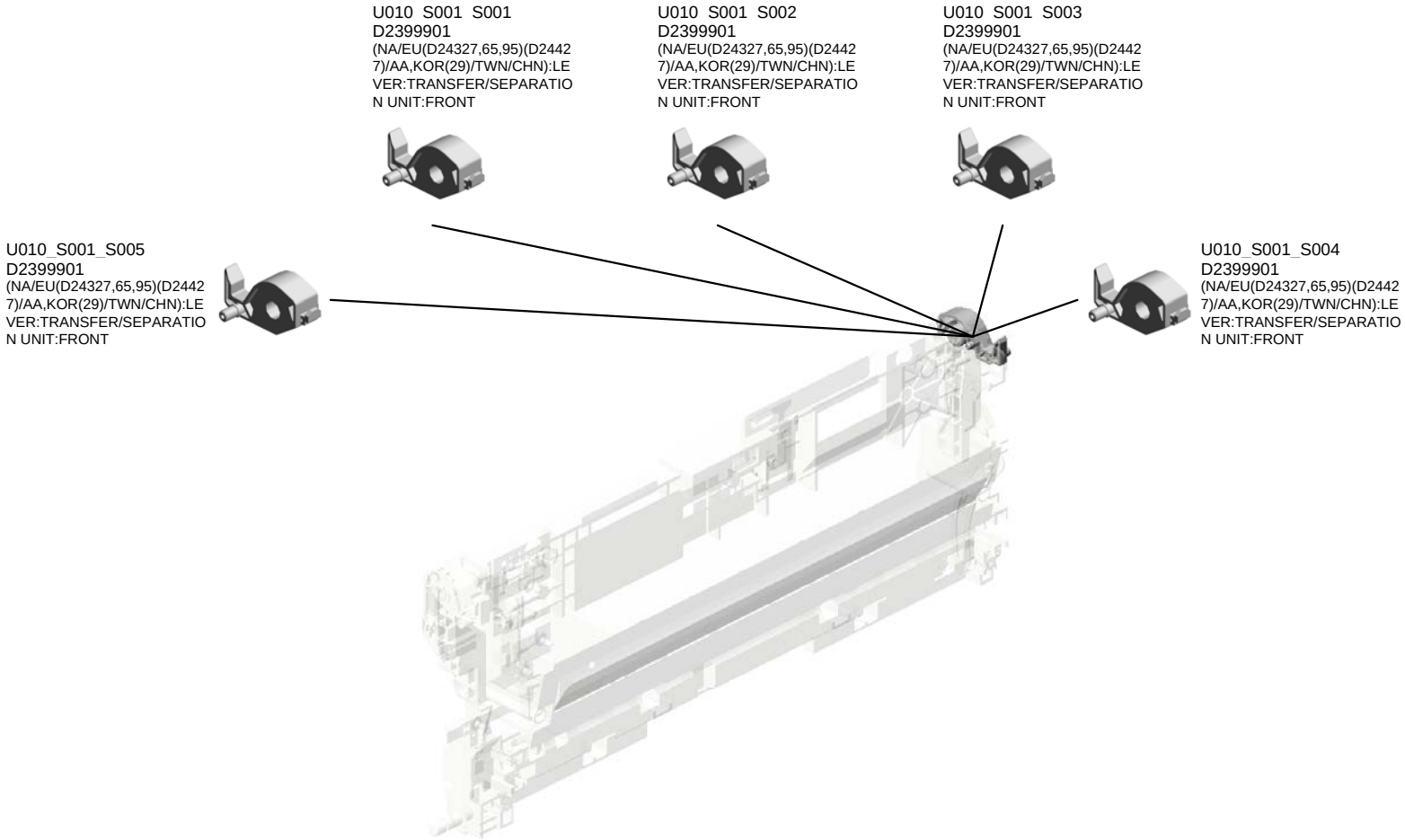

Copyright (c) 2006-2016 Ricoh Company, Ltd. 2016/07/29 Version 1.00

U010
SEPARATION/TRANSPORT

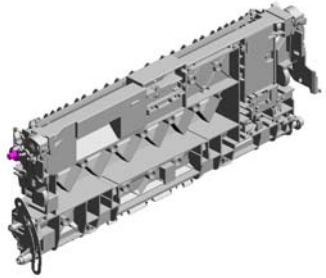

38.D1496291
GUIDE:SET:TRANSFER/SEPARATION UNIT:REAR

15.AW020224
PHOTOINTERRUPTOR:GP1A173LCSVF

9.AA063942
COMPRESSION SPRING:REGISTRATION:DRIVE

21.D1492990
PLAIN SHAFT BEARING:DRIVE:REGISTRATION ROLLER

11.AA080346
(x2)
BUSHING:FLANGE TYPE:DIA6

39.D1496295
COVER:HARNESS:TRANSFER/SEPARATION UNIT

13.AB011571
GEAR:Z19:DRIVE:REGISTRATION

18.D1492584
(x2)
COLLAR:SHAFT:REGISTRATION ROLLER

7.52152621
SNAP RING - M6

12.AA082144
BUSHING - 8X12X7

2.04543008Q
(x2)
TAPPING SCREW:3X8

37.D1496290
GUIDE:SET:TRANSFER/SEPARATION UNIT:FRONT

8.54472681
SNAP RING

4.07200030E
(x2)
RETAINING RING - M3

5.07200040E
(x3)
RETAINING RING - M4

19.D1492585
GUIDE:REGISTRATION:REAR RIGHT

17.D1492582
GUIDE PLATE:REGISTRATION:FRONT RIGHT

20.D1492586
GUIDE:REGISTRATION:FRONT RIGHT

10.AA063943
(x2)
COMPRESSION SPRING:GUIDE PLATE:REGISTRATION:4N

3.04583008N
(x2)
HEXAGON HEAD TAPPING SCREW:3X8

Copyright (c) 2006-2016 Ricoh Company, Ltd. 2016/07/29 Version 1.00

U010
SEPARATION/TRANSPORT

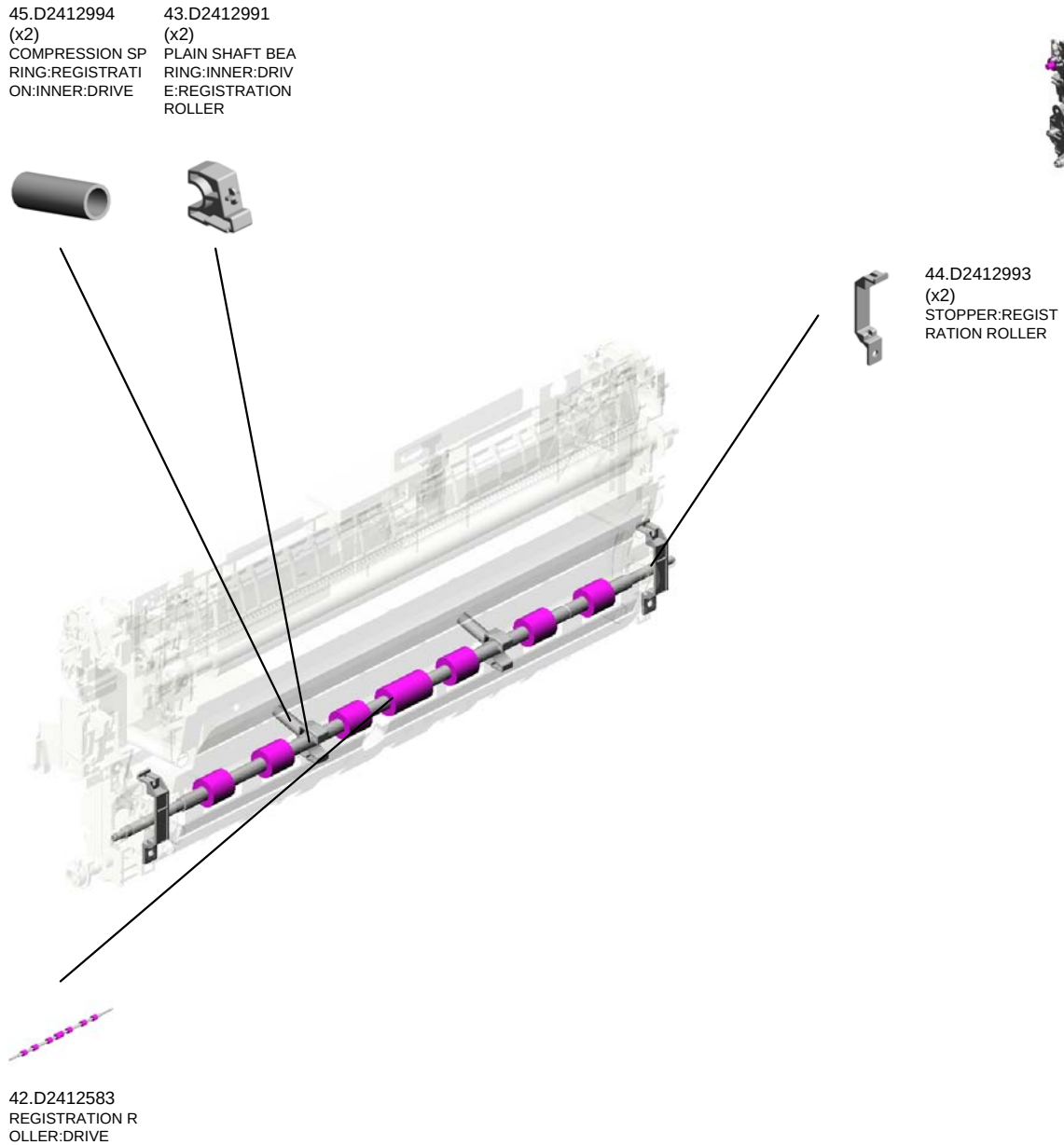

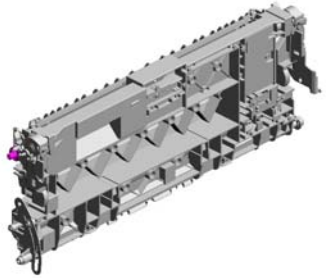

Copyright (c) 2006-2016 Ricoh Company, Ltd. 2016/07/29 Version 1.00

U010_S001
GUIDE PLATE:TRANSFER:SECOND:ASS'Y

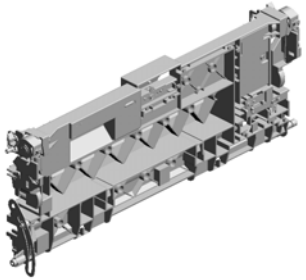

47.D2416215
GUIDE PLATE:TRANSFER:SECOND:ASS'Y

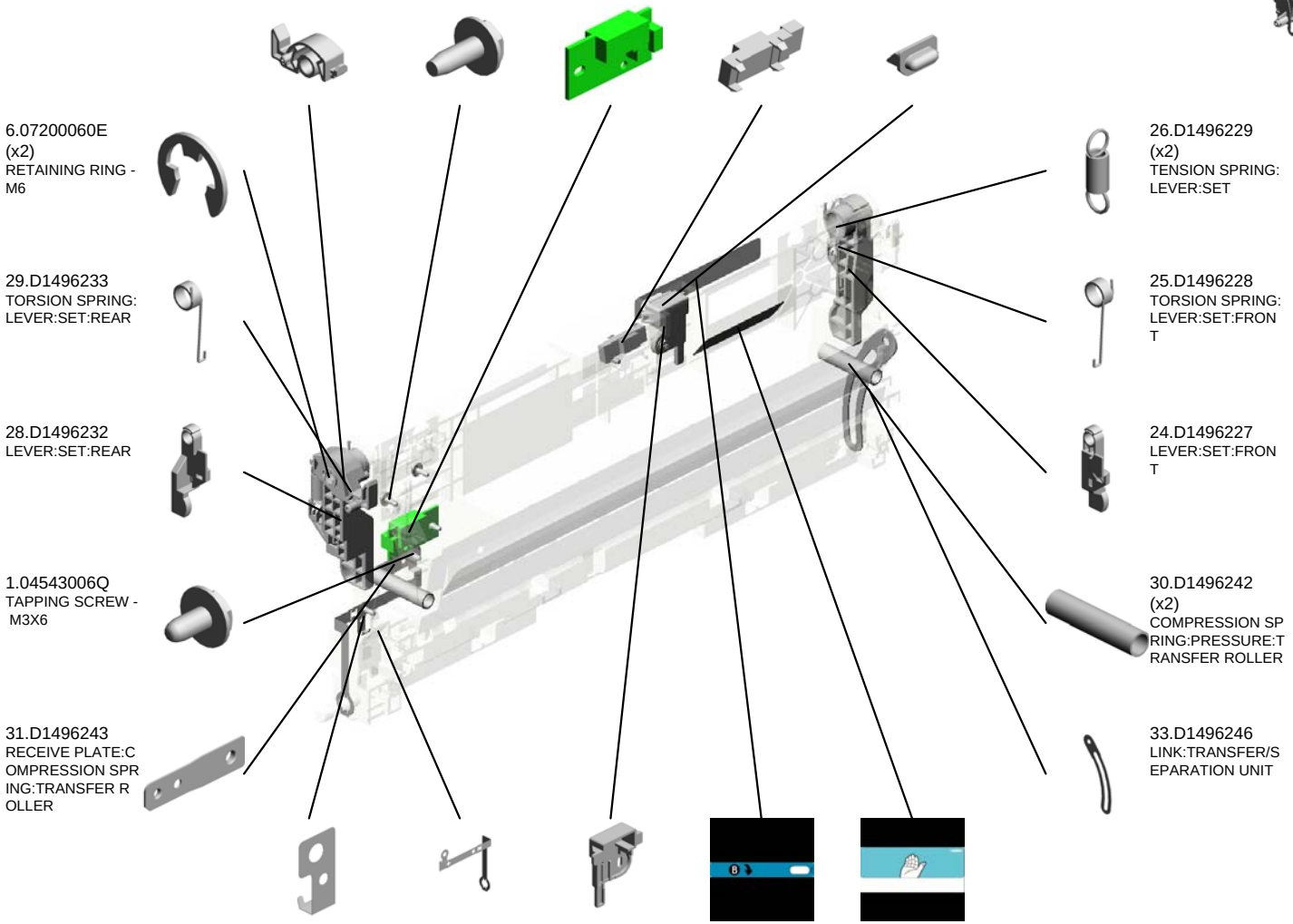

Copyright (c) 2006-2016 Ricoh Company, Ltd. 2016/07/29 Version 1.00

U010_S001
GUIDE PLATE:TRANSFER:SECOND:ASS'Y

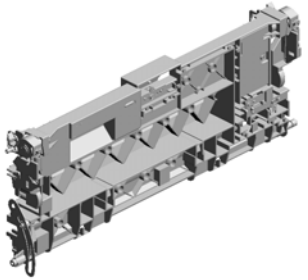

47.D2416215
GUIDE PLATE:TRANSFER:SECOND:ASS'Y

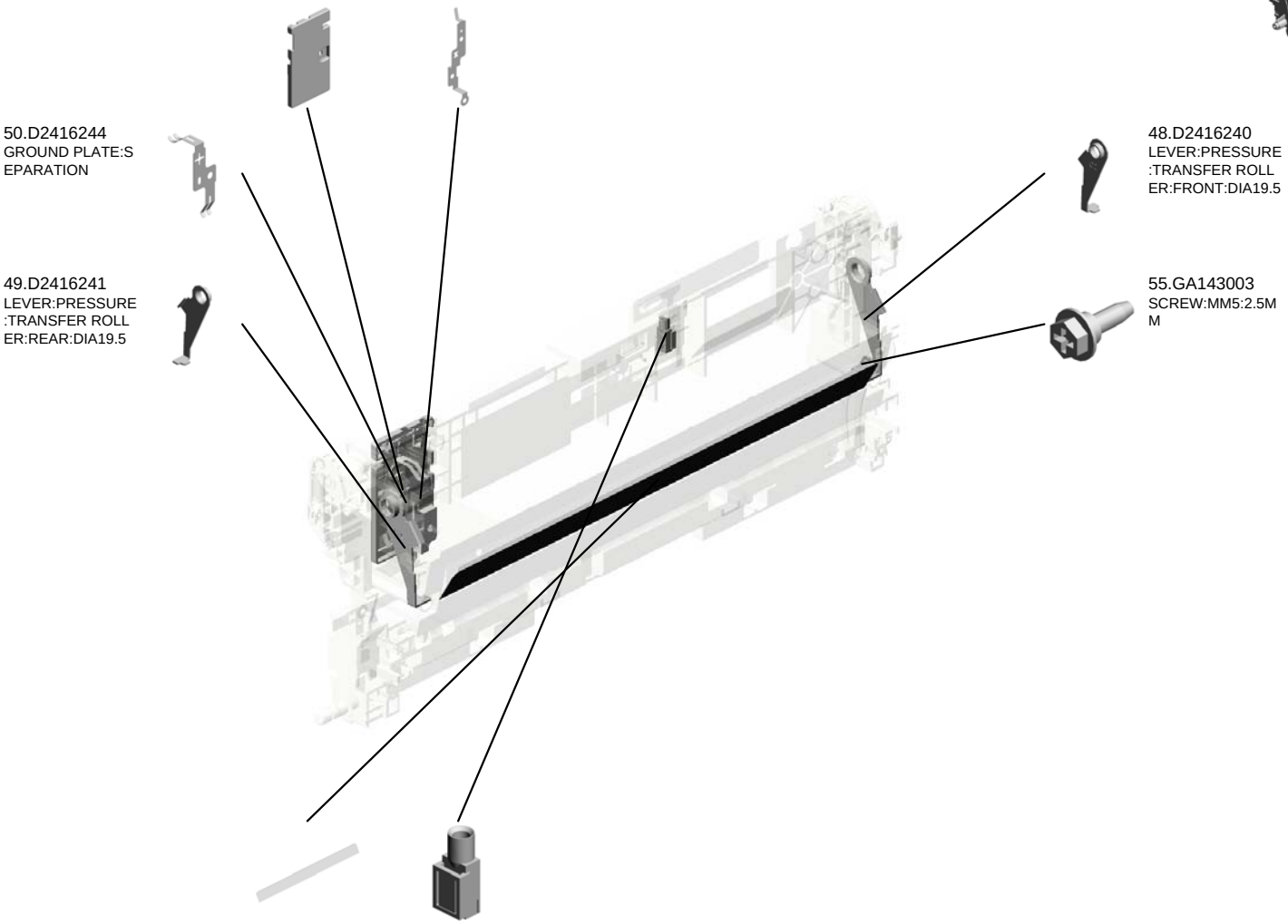

Copyright (c) 2006-2016 Ricoh Company, Ltd. 2016/07/29 Version 1.00

U010_S001_S001
(NA/EU(D24327,65,95)(D24427)/AA,KOR(29)/TWN/CHN):LEVER:TRANSFER/SEPARATION UNIT:FRONT

23.D1496226
LEVER:TRANSFER
/SEPARATION UNI
T:FRONT

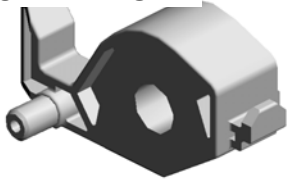

41.D2399901
(NA/EU(D24327,65,
95)(D24427)/AA,KO
R(29)/TWN/CHN):L
EVER:TRANSFER/
SEPARATION UNIT
:FRONT

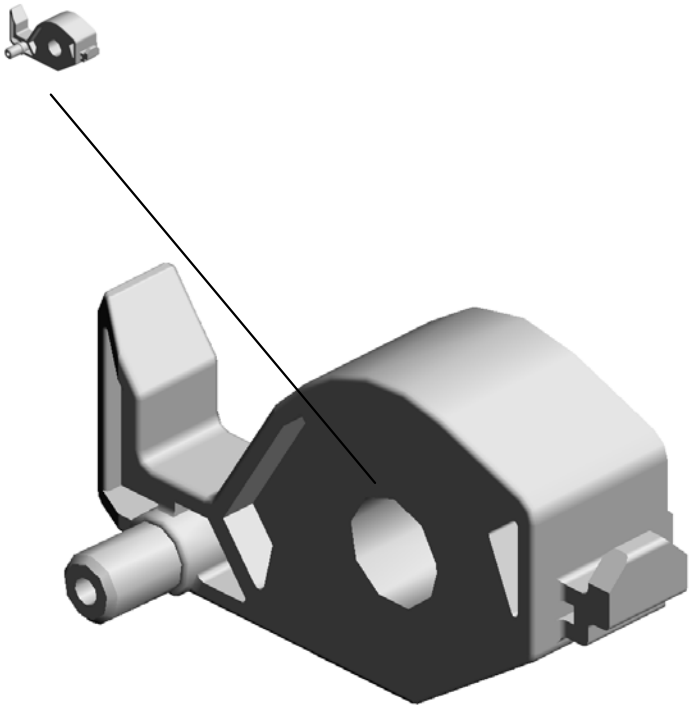

Copyright (c) 2006-2016 Ricoh Company, Ltd. 2016/07/29 Version 1.00

(NA/EU(D24327,65,95)(D24427)/AA,KOR(29)/TWN/CHN):LEVER:TRANSFER/SEPARATION UNIT:FRONT

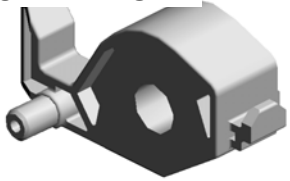

41.D2399901
(NA/EU(D24327,65,95)(D24427)/AA,KOR(29)/TWN/CHN):LEVER:TRANSFER/SEPARATION UNIT:FRONT

23.D1496226
LEVER:TRANSFER/SEPARATION UNIT:FRONT

Copyright (c) 2006-2016 Ricoh Company, Ltd. 2016/07/29 Version 1.00

(NA/EU(D24327,65,95)(D24427)/AA,KOR(29)/TWN/CHN):LEVER:TRANSFER/SEPARATION UNIT:FRONT

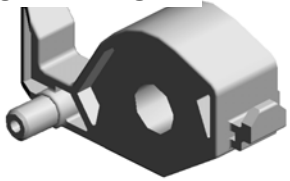

41.D2399901
(NA/EU(D24327,65,95)(D24427)/AA,KOR(29)/TWN/CHN):LEVER:TRANSFER/SEPARATION UNIT:FRONT

23.D1496226
LEVER:TRANSFER/SEPARATION UNIT:FRONT

Copyright (c) 2006-2016 Ricoh Company, Ltd. 2016/07/29 Version 1.00

(NA/EU(D24327,65,95)(D24427)/AA,KOR(29)/TWN/CHN):LEVER:TRANSFER/SEPARATION UNIT:FRONT

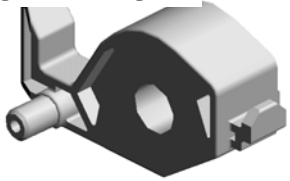

41.D2399901
(NA/EU(D24327,65,95)(D24427)/AA,KOR(29)/TWN/CHN):LEVER:TRANSFER/SEPARATION UNIT:FRONT

23.D1496226
LEVER:TRANSFER/SEPARATION UNIT:FRONT

Copyright (c) 2006-2016 Ricoh Company, Ltd. 2016/07/29 Version 1.00

(NA/EU(D24327,65,95)(D24427)/AA,KOR(29)/TWN/CHN):LEVER:TRANSFER/SEPARATION UNIT:FRONT

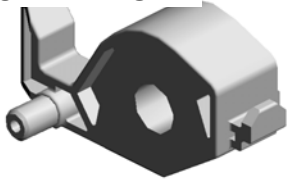

41.D2399901
(NA/EU(D24327,65,95)(D24427)/AA,KOR(29)/TWN/CHN):LEVER:TRANSFER/SEPARATION UNIT:FRONT

23.D1496226
LEVER:TRANSFER/SEPARATION UNIT:FRONT

Copyright (c) 2006-2016 Ricoh Company, Ltd. 2016/07/29 Version 1.00

U010_S002
TRANSFER ROLLER:SECOND:ASS'Y

Copyright (c) 2006-2016 Ricoh Company, Ltd. 2016/07/29 Version 1.00

U011.FUSING

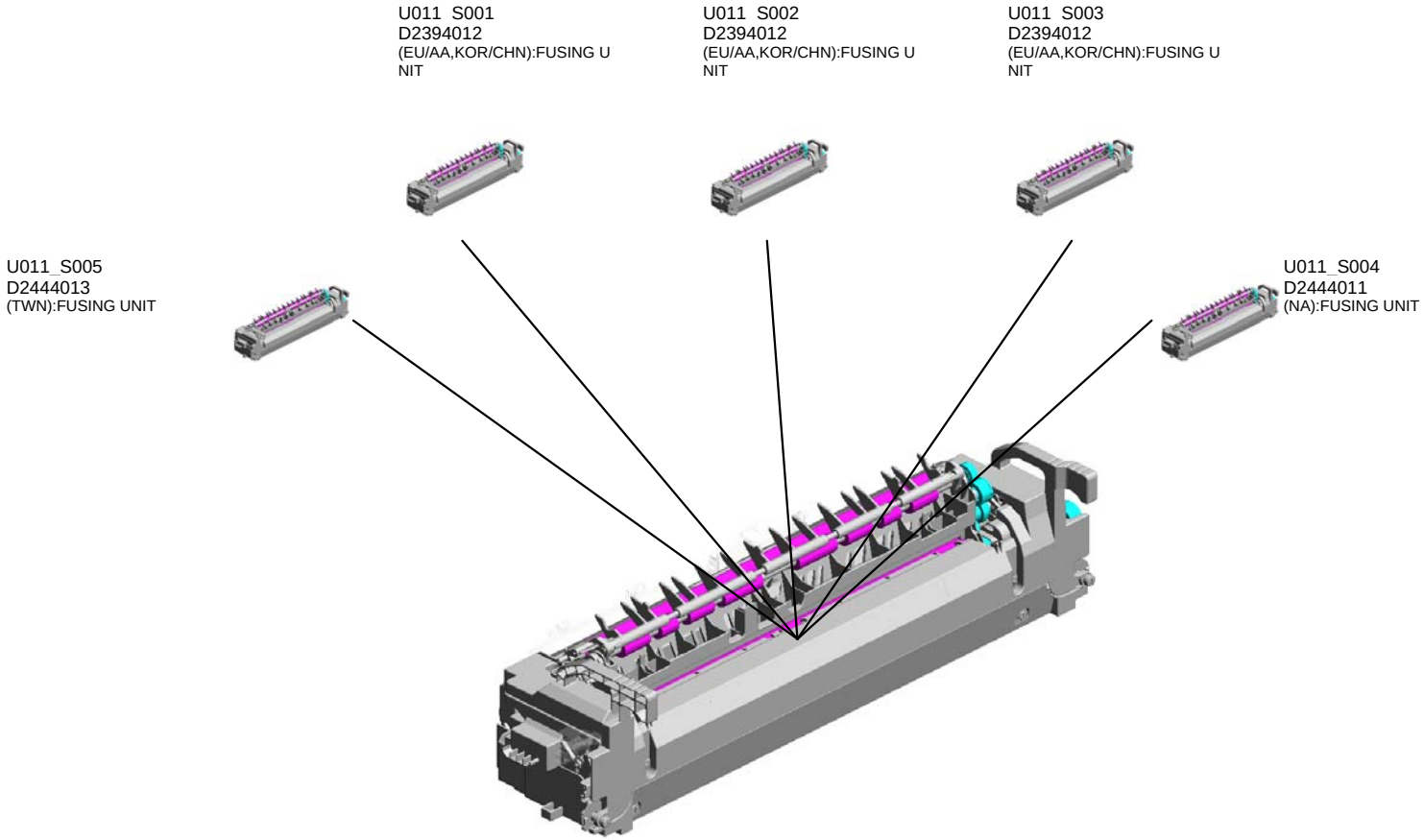

Copyright (c) 2006-2016 Ricoh Company, Ltd. 2016/07/29 Version 1.00

U011_S001.(EU/AA,KOR/CHN):FUSING UNIT

U011 S001 S001
D2394042
(EU/AA,KOR/CHN):SLEEVE:F
USING

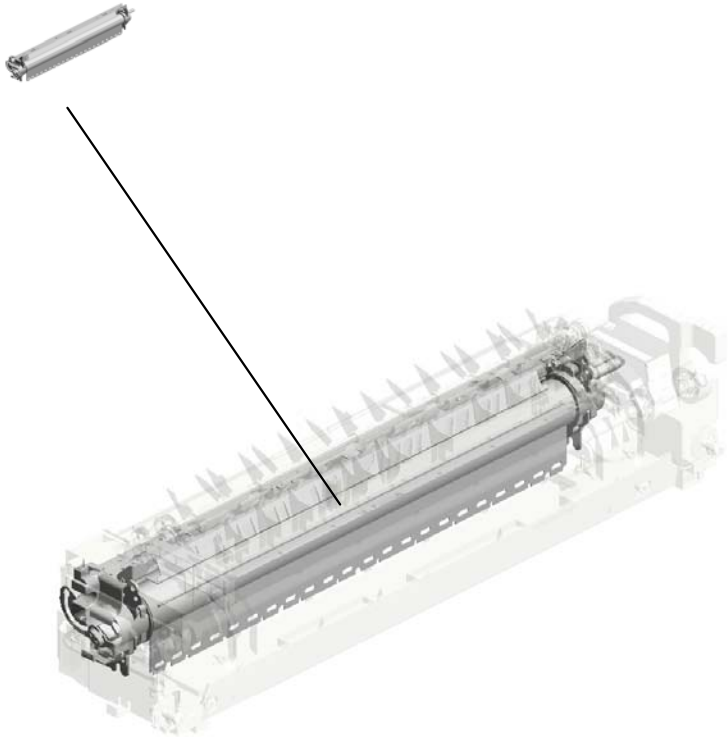

Copyright (c) 2006-2016 Ricoh Company, Ltd. 2016/07/29 Version 1.00

U011_S002.(EU/AA,KOR/CHN):FUSING UNIT

U011 S002 S001
D2394042
(EU/AA,KOR/CHN):SLEEVE:F
USING

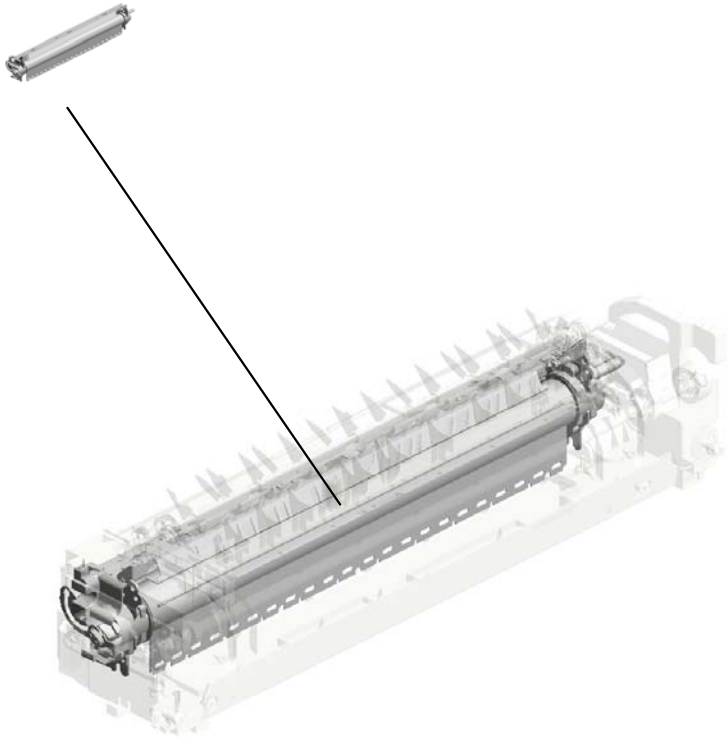

Copyright (c) 2006-2016 Ricoh Company, Ltd. 2016/07/29 Version 1.00

U011_S003.(EU/AA,KOR/CHN):FUSING UNIT

U011 S003 S001
D2394042
(EU/AA,KOR/CHN):SLEEVE:F
USING

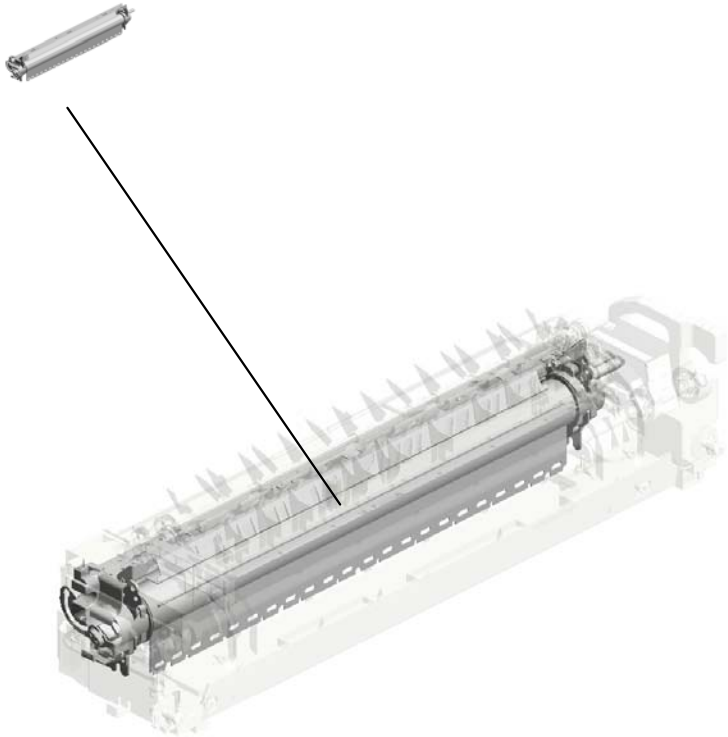

Copyright (c) 2006-2016 Ricoh Company, Ltd. 2016/07/29 Version 1.00

U011_S004.(NA):FUSING UNIT

U011 S004 S001
D2444041
(NA):SLEEVE:FUSING

Copyright (c) 2006-2016 Ricoh Company, Ltd. 2016/07/29 Version 1.00

U011_S005.(TWN):FUSING UNIT

U011 S005 S001
D2444043
(TWN):SLEEVE:FUSING

Copyright (c) 2006-2016 Ricoh Company, Ltd. 2016/07/29 Version 1.00

U011
FUSING

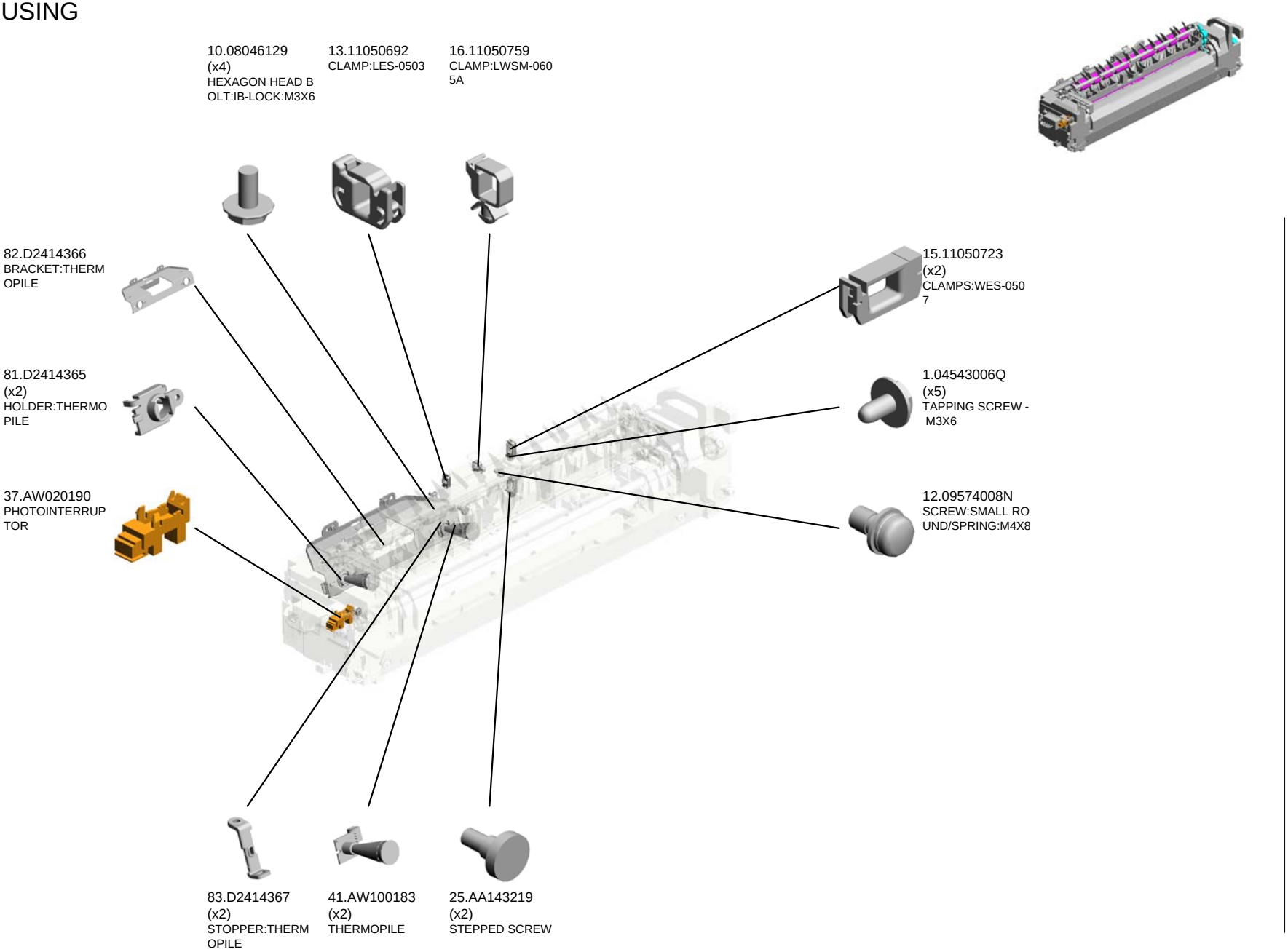

Copyright (c) 2006-2016 Ricoh Company, Ltd. 2016/07/29 Version 1.00

U011_S001
(EU/AA,KOR/CHN):FUSING UNIT

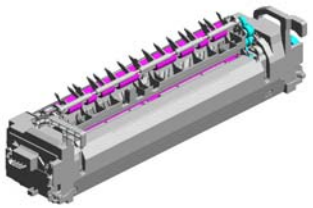

52.D2394012
(EU/AA,KOR/CHN):
FUSING UNIT

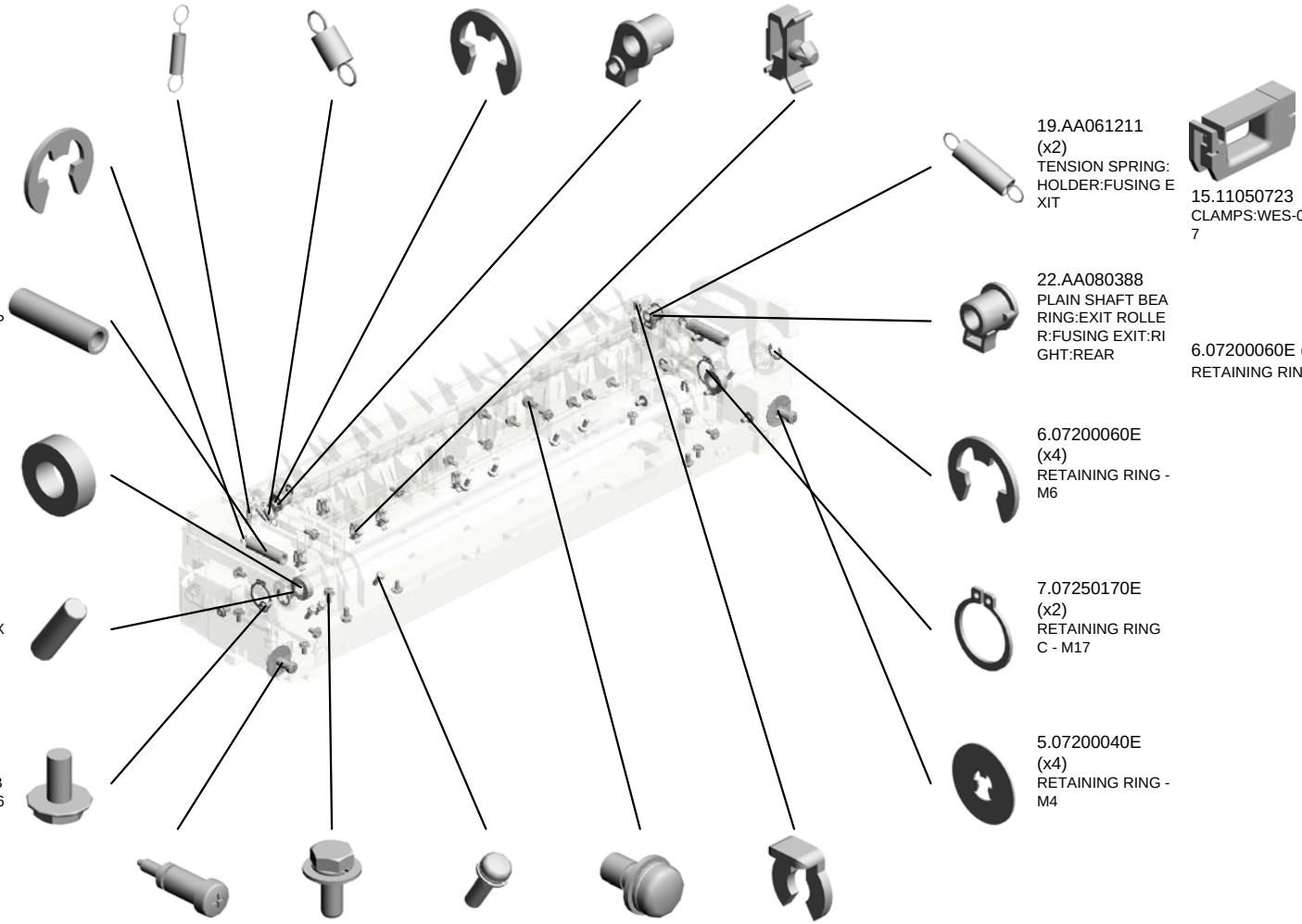

15.11050723
CLAMPS:WES-050
7

6.07200060E (x 1)
RETAINING RING - M6

Copyright (c) 2006-2016 Ricoh Company, Ltd. 2016/07/29 Version 1.00

U011_S001
(EU/AA,KOR/CHN):FUSING UNIT

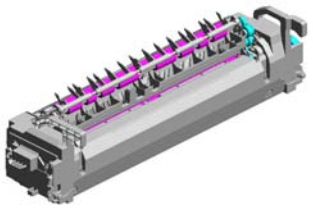

52.D2394012
(EU/AA,KOR/CHN):
FUSING UNIT

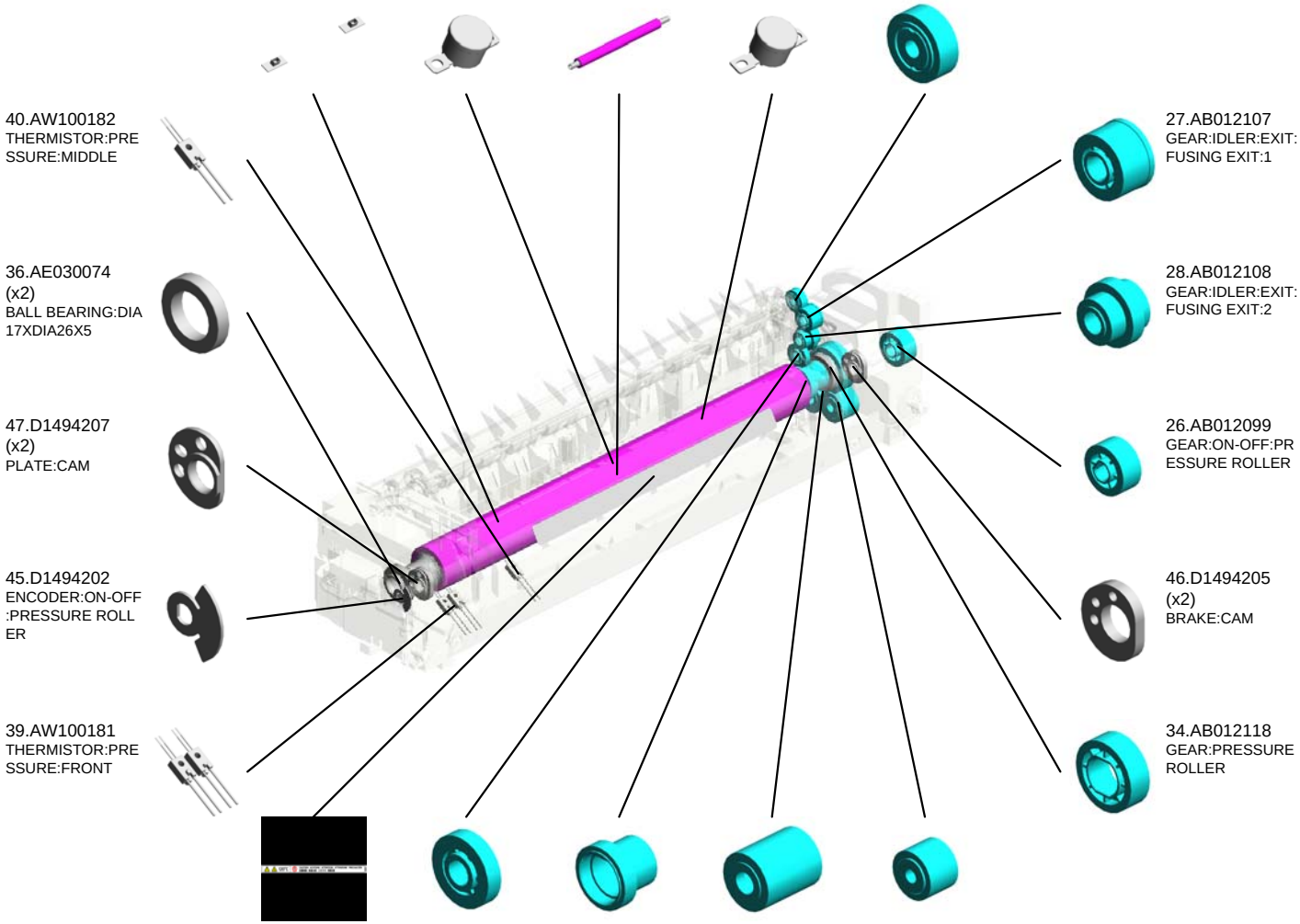

Copyright (c) 2006-2016 Ricoh Company, Ltd. 2016/07/29 Version 1.00

U011_S001
(EU/AA,KOR/CHN):FUSING UNIT

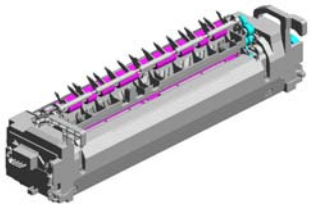

52.D2394012
(EU/AA,KOR/CHN):
FUSING UNIT

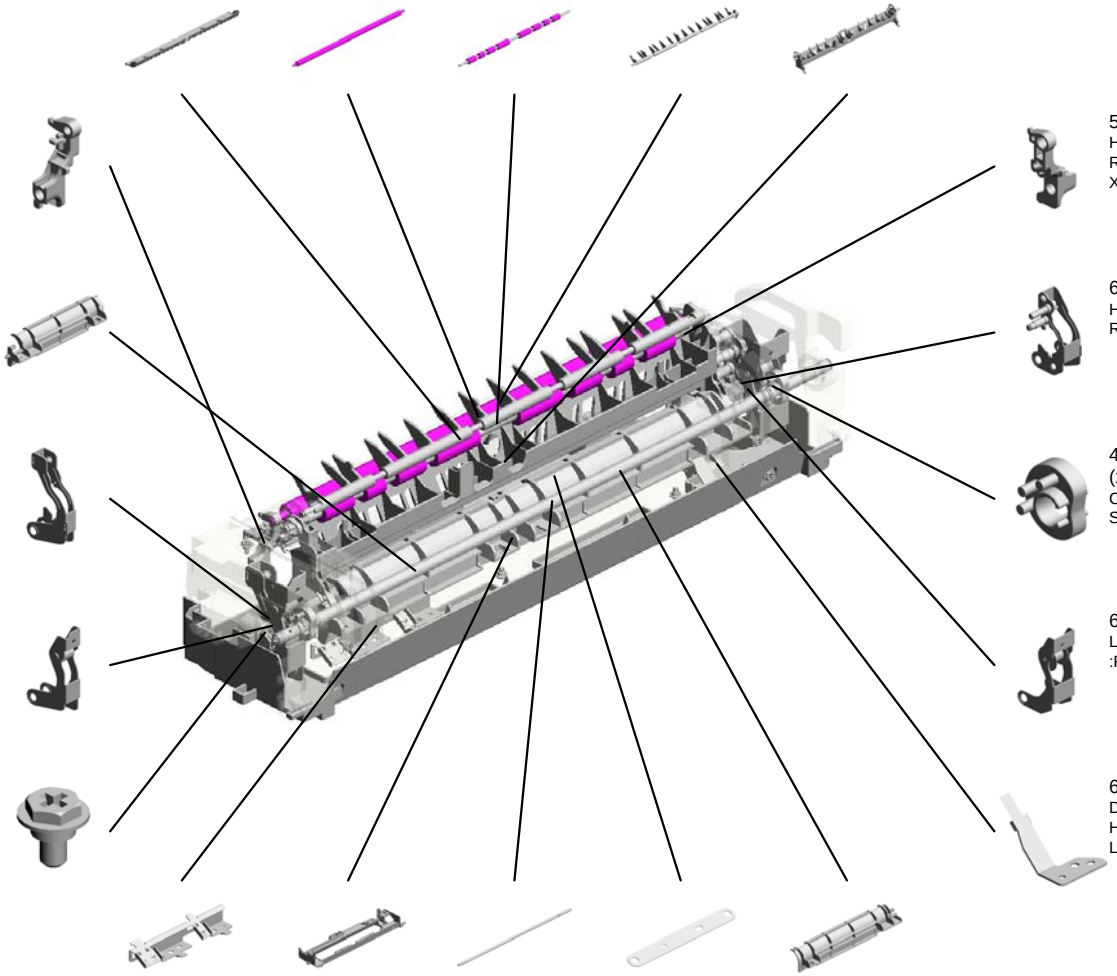

Copyright (c) 2006-2016 Ricoh Company, Ltd. 2016/07/29 Version 1.00

U011_S001
(EU/AA,KOR/CHN):FUSING UNIT

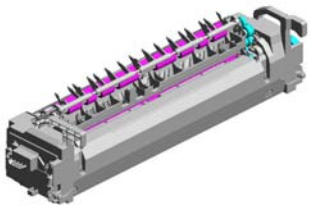

52.D2394012
(EU/AA,KOR/CHN):
FUSING UNIT

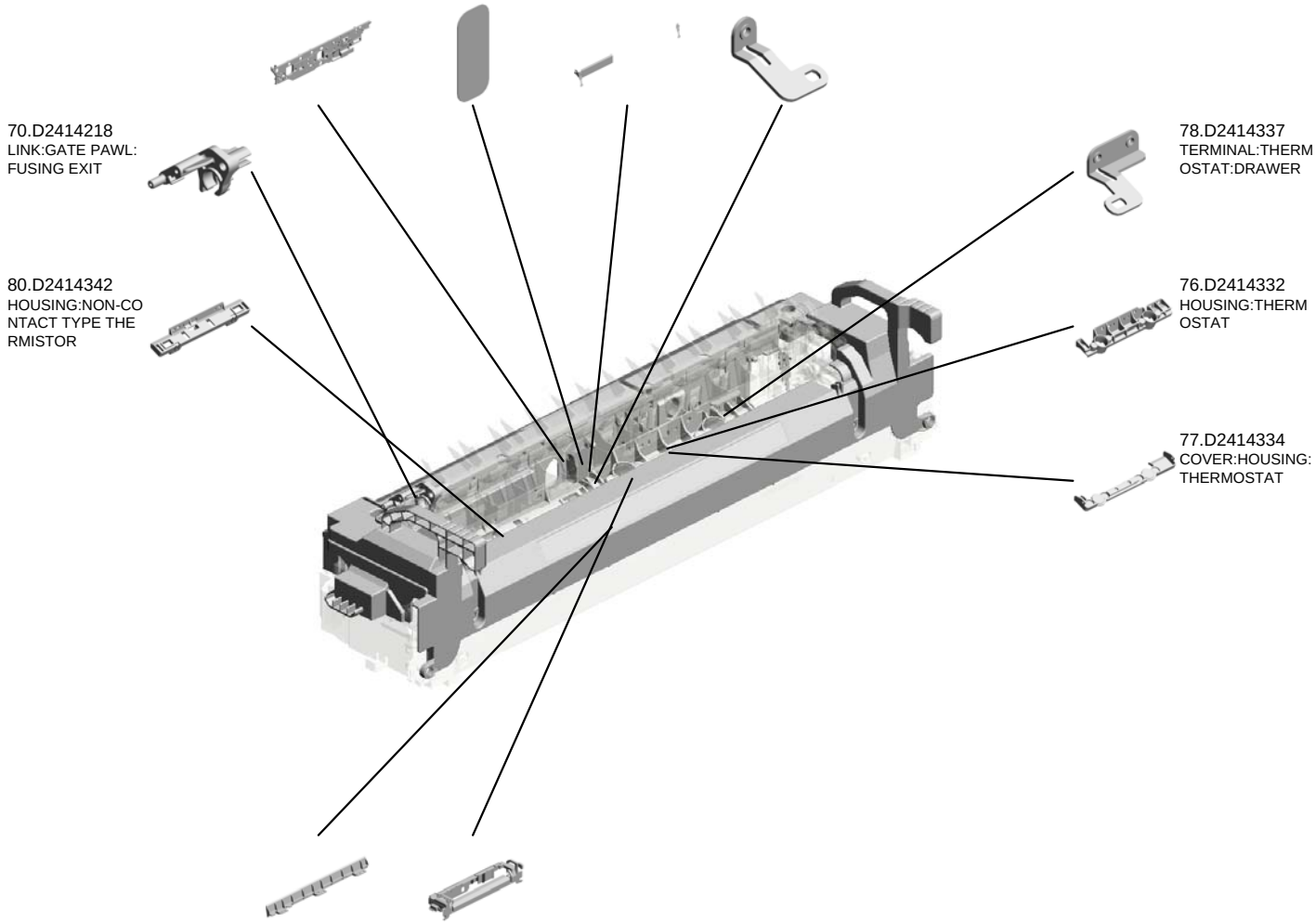

Copyright (c) 2006-2016 Ricoh Company, Ltd. 2016/07/29 Version 1.00

U011_S001_S001
(EU/AA,KOR/CHN):SLEEVE:FUSING

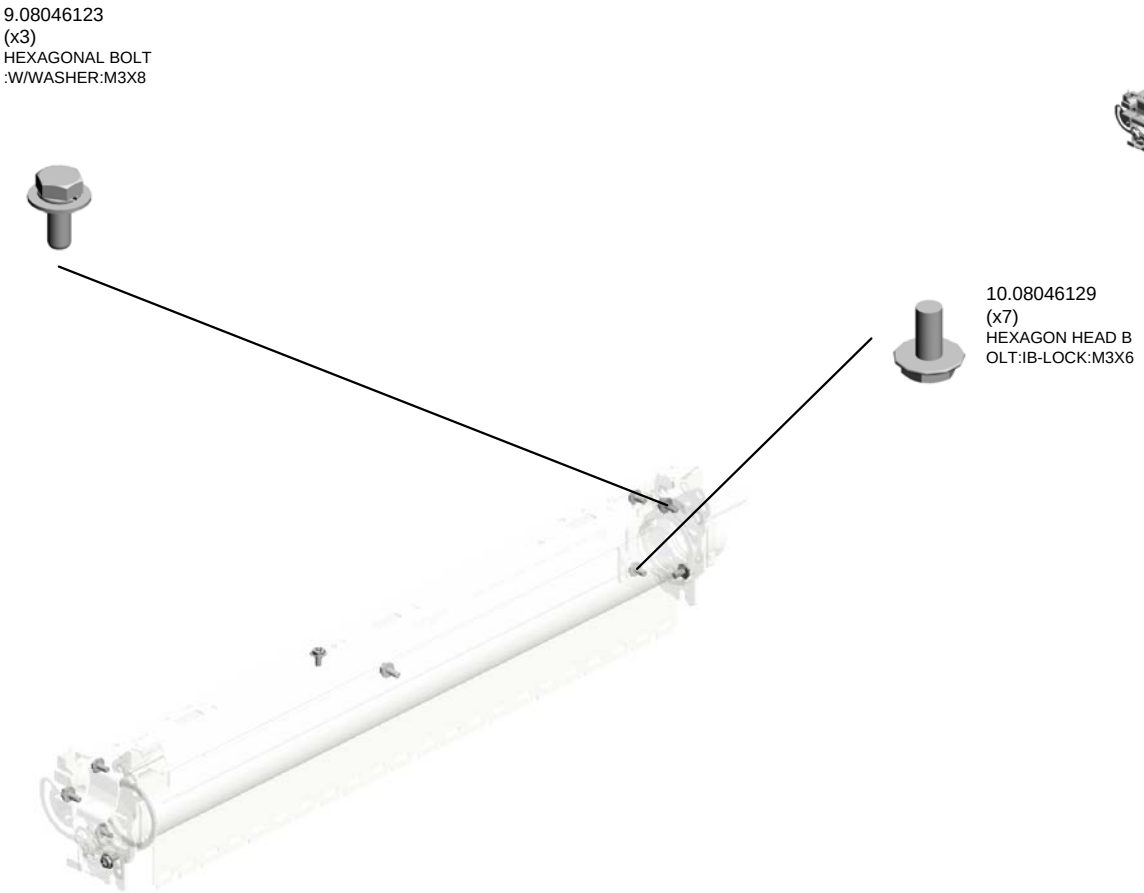

Copyright (c) 2006-2016 Ricoh Company, Ltd. 2016/07/29 Version 1.00

U011_S002
(EU/AA,KOR/CHN):FUSING UNIT

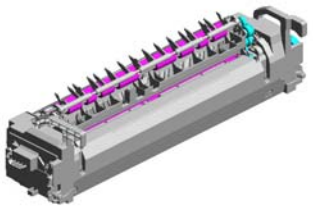

52.D2394012
(EU/AA,KOR/CHN):
FUSING UNIT

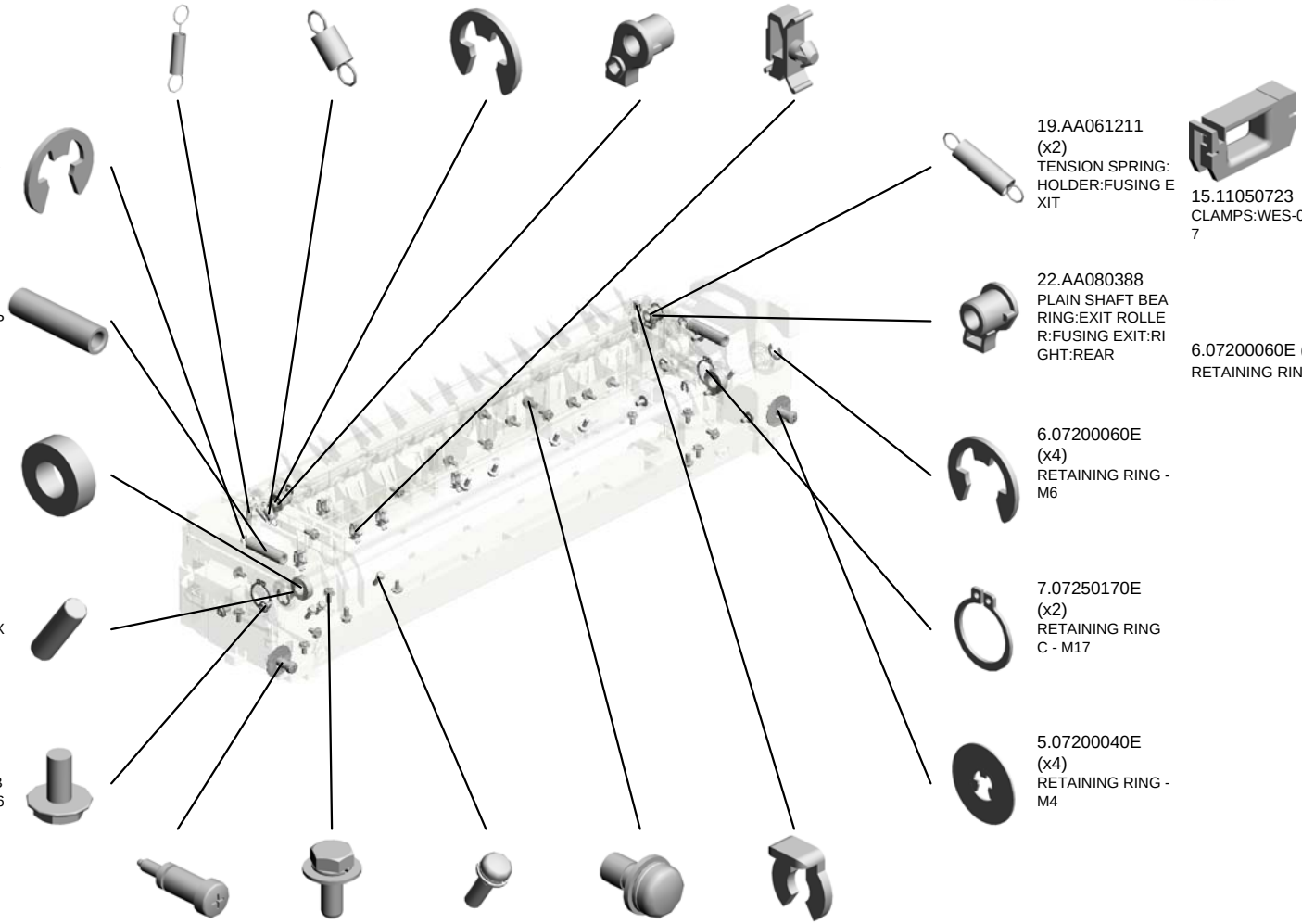

15.11050723
CLAMPS:WES-050
7

6.07200060E (x 1)
RETAINING RING - M6

Copyright (c) 2006-2016 Ricoh Company, Ltd. 2016/07/29 Version 1.00

U011_S002
(EU/AA,KOR/CHN):FUSING UNIT

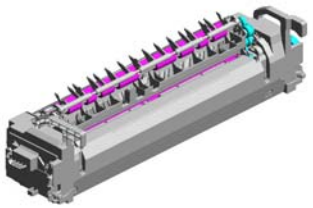

52.D2394012
(EU/AA,KOR/CHN):
FUSING UNIT

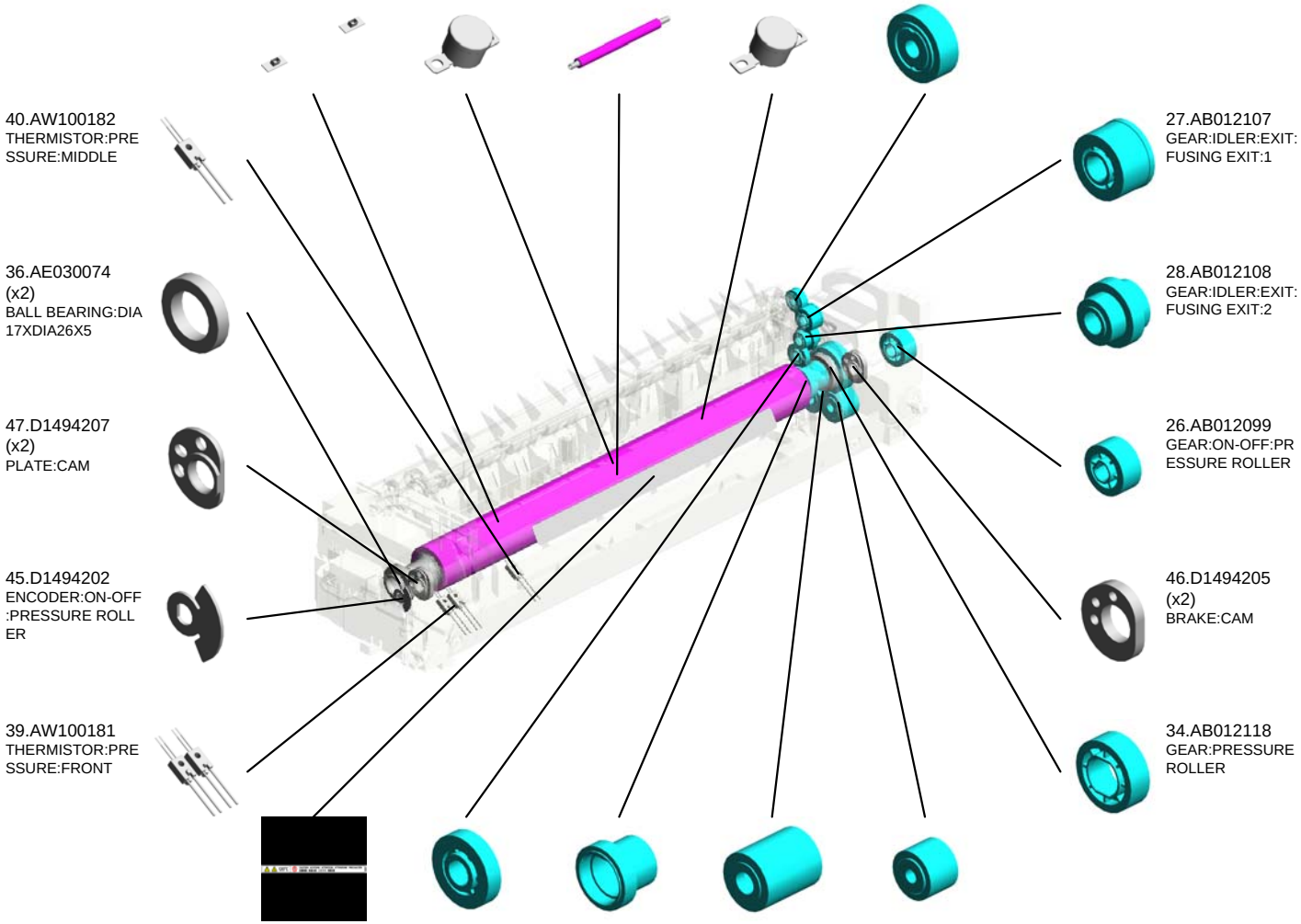

Copyright (c) 2006-2016 Ricoh Company, Ltd. 2016/07/29 Version 1.00

U011_S002
(EU/AA,KOR/CHN):FUSING UNIT

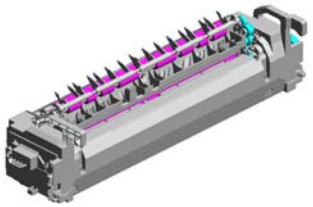

52.D2394012
(EU/AA,KOR/CHN):
FUSING UNIT

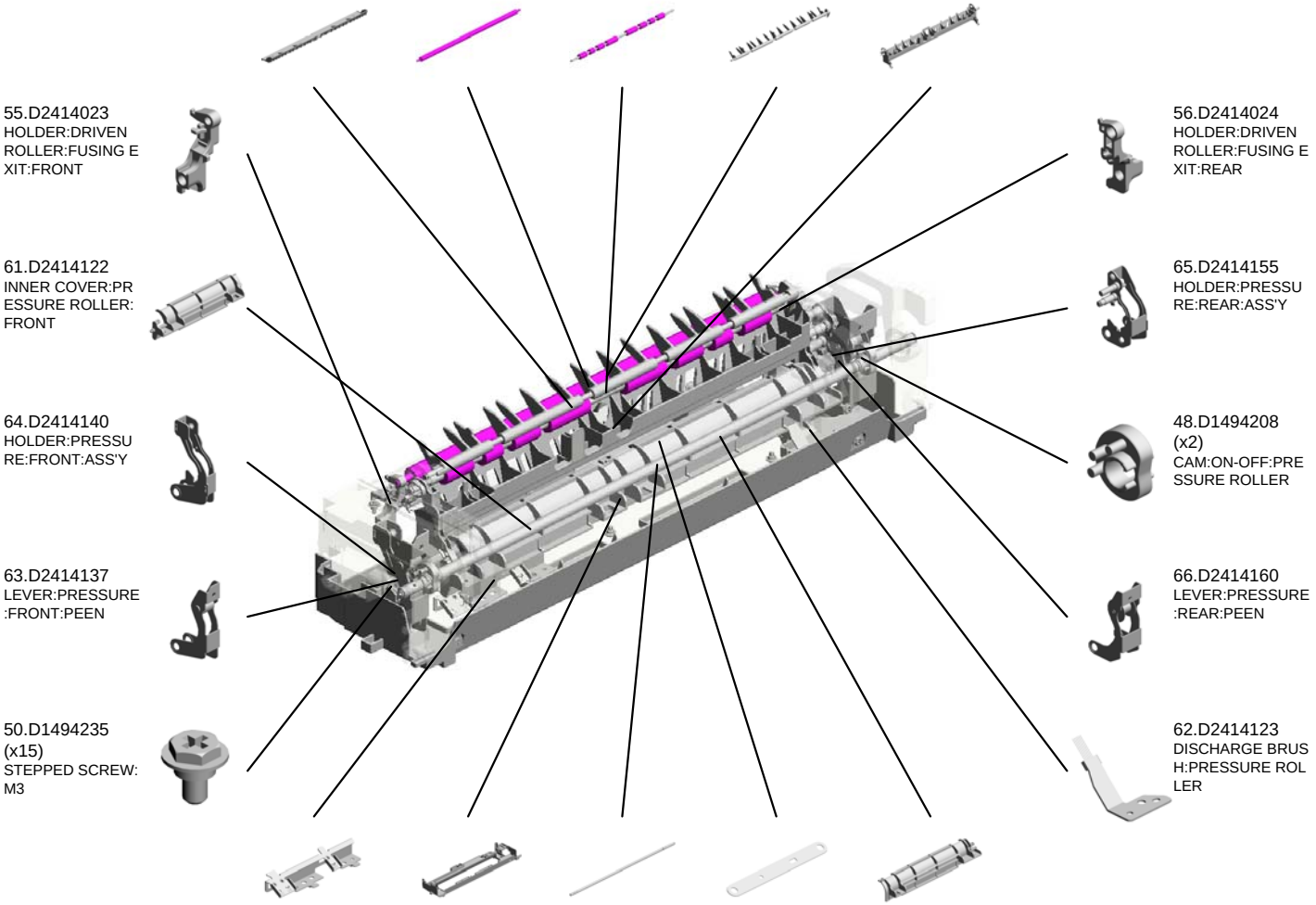

Copyright (c) 2006-2016 Ricoh Company, Ltd. 2016/07/29 Version 1.00

U011_S002
(EU/AA,KOR/CHN):FUSING UNIT

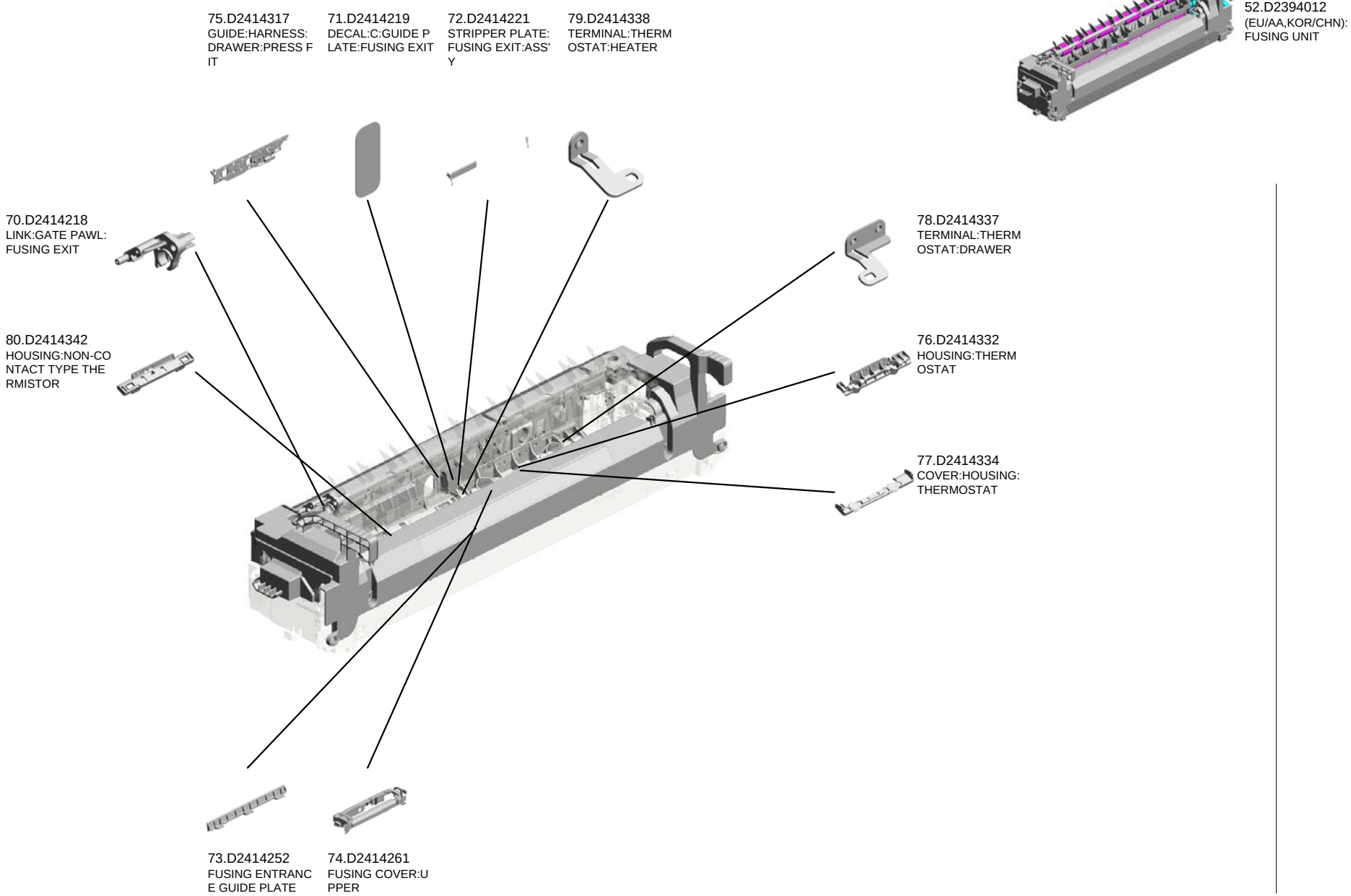

Copyright (c) 2006-2016 Ricoh Company, Ltd. 2016/07/29 Version 1.00

U011_S002_S001
(EU/AA,KOR/CHN):SLEEVE:FUSING

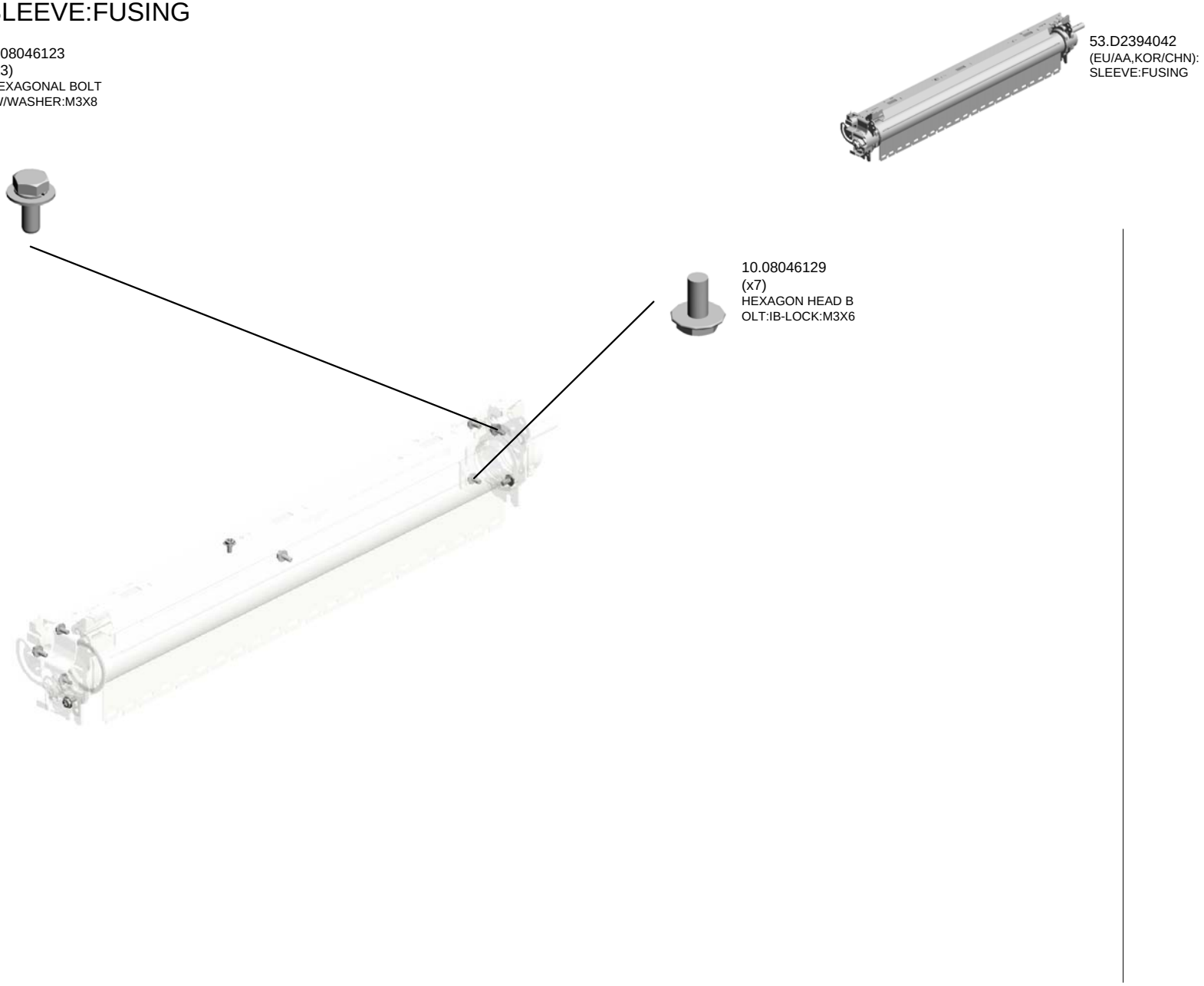

Copyright (c) 2006-2016 Ricoh Company, Ltd. 2016/07/29 Version 1.00

U011_S003
(EU/AA,KOR/CHN):FUSING UNIT

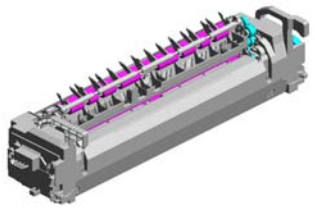

52.D2394012
(EU/AA,KOR/CHN):
FUSING UNIT

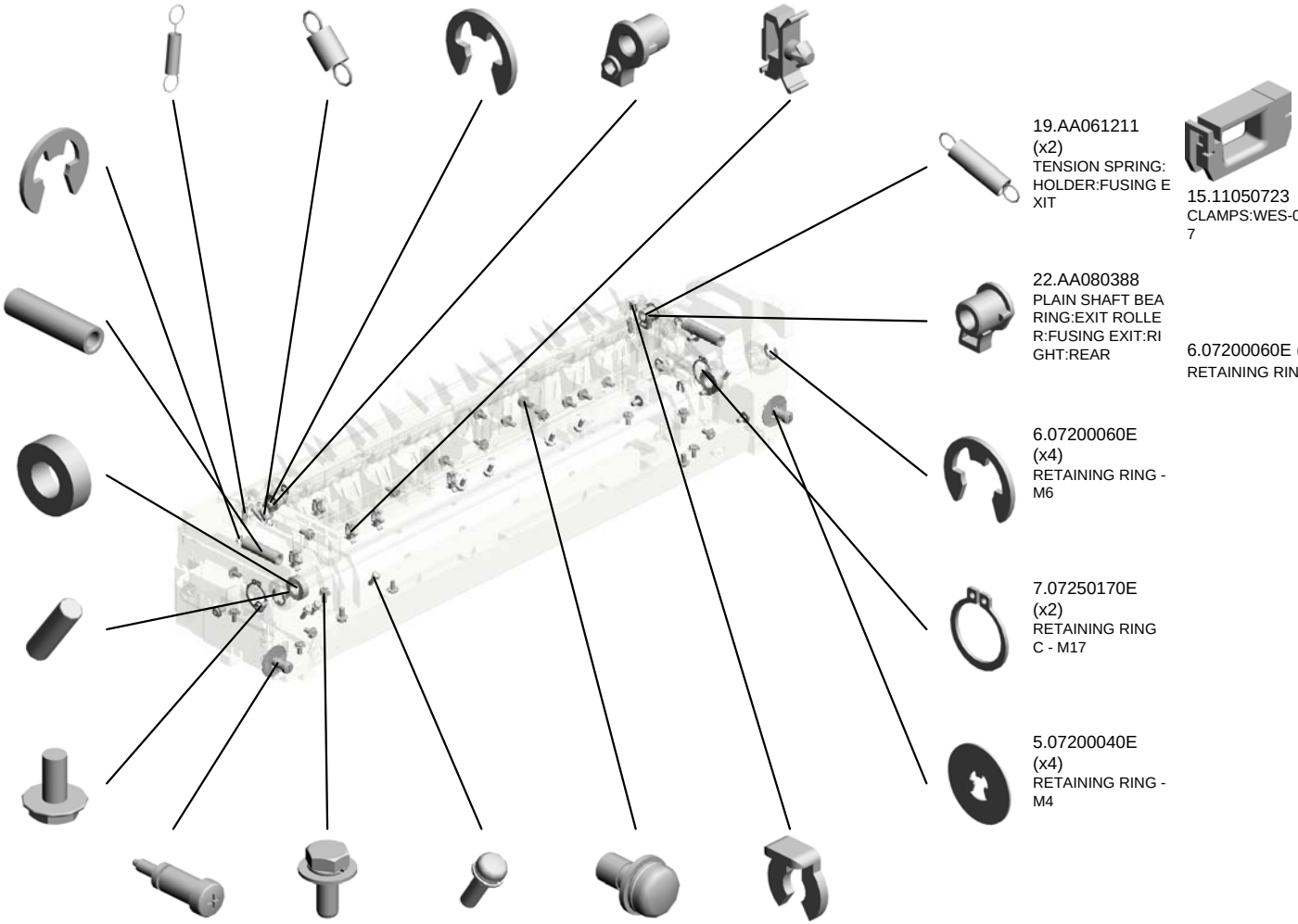

17.AA061208
(x2)
TENSION SPRING:
STRIPPER PLATE

18.AA061209
TENSION SPRING:
GATE PAWL

4.07200030E
(x3)
RETAINING RING -
M3

21.AA080387
PLAIN SHAFT BEA
RING:EXIT ROLLE
R:FUSING EXIT:RI
GHT:FRONT

14.11050713
(x5)
CLAMP:LWSM-030
6H GRAY

3.07200025E
(x2)
RETAINING RING -
M2.5

20.AA063732
(x2)
COMPRESSION SP
RING:PRESSURE
ROLLER

8.07403808
(x2)
BALL BEARING - 8
X16X5MM

2.06330100G
(x2)
PARALLEL PIN - 3X
10

10.08046129
(x17)
HEXAGON HEAD B
OLT:IB-LOCK:M3X6

19.AA061211
(x2)
TENSION SPRING:
HOLDER:FUSING E
XIT

15.11050723
CLAMPS:WES-050
7

22.AA080388
PLAIN SHAFT BEA
RING:EXIT ROLLE
R:FUSING EXIT:RI
GHT:REAR

6.07200060E (x 1)
RETAINING RING - M6

6.07200060E
(x4)
RETAINING RING -
M6

7.07250170E
(x2)
RETAINING RING
C - M17

5.07200040E
(x4)
RETAINING RING -
M4

24.AA100018
(x2)
STEPPED SCREW:
FIX:FUSING

9.08046123
(x15)
HEXAGONAL BOLT
:W/WASHER:M3X8

11.09573010N
(x3)
SCREW:SMALL RO
UND/SPRING:M3X1
0

12.09574008N
SCREW:SMALL RO
UND/SPRING:M4X8

23.AA100016
(x2)
RETAINING RINGS
-C:DIA3

Copyright (c) 2006-2016 Ricoh Company, Ltd. 2016/07/29 Version 1.00

U011_S003
(EU/AA,KOR/CHN):FUSING UNIT

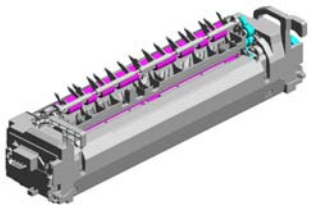

52.D2394012
(EU/AA,KOR/CHN):
FUSING UNIT

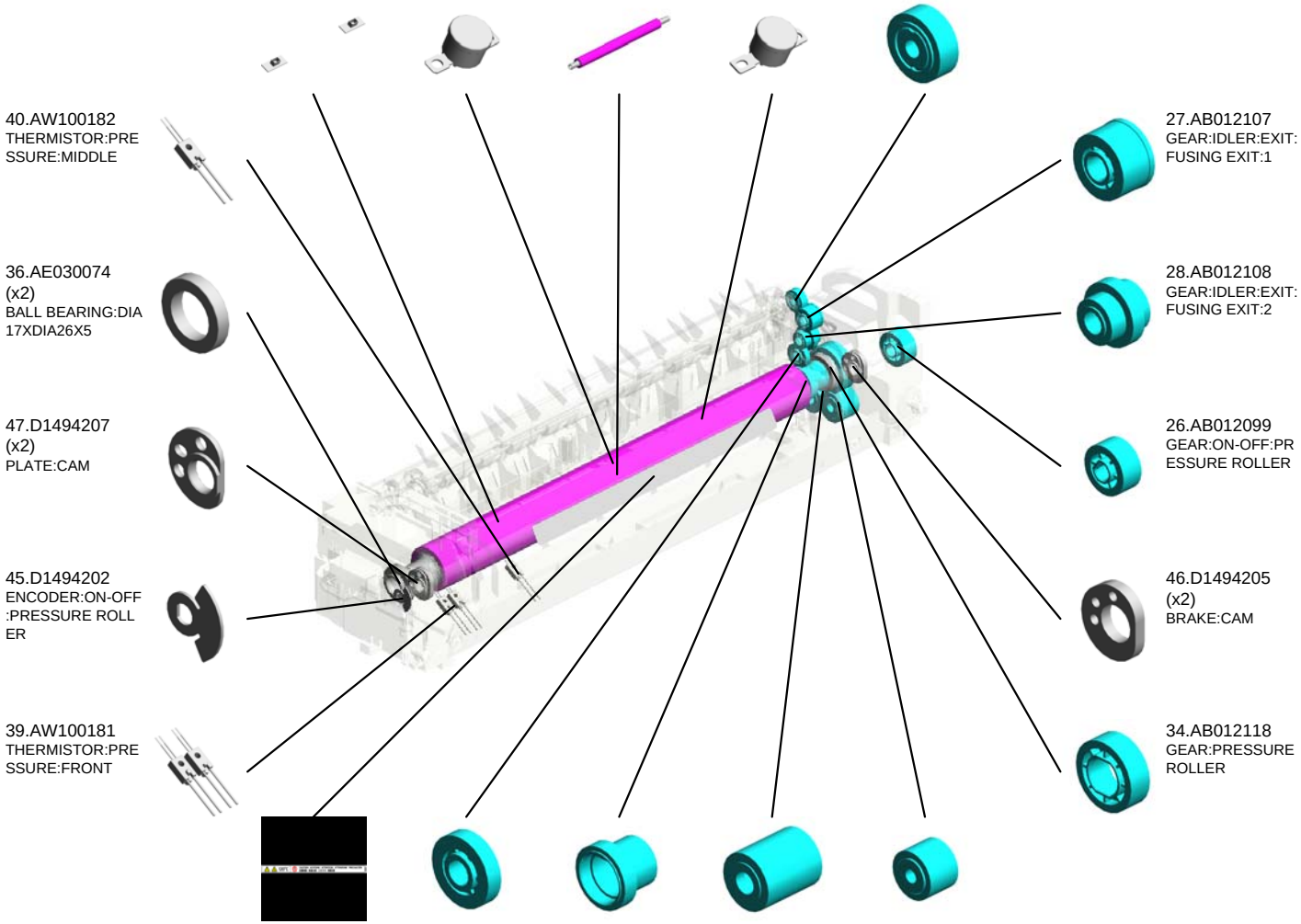

Copyright (c) 2006-2016 Ricoh Company, Ltd. 2016/07/29 Version 1.00

U011_S003
(EU/AA,KOR/CHN):FUSING UNIT

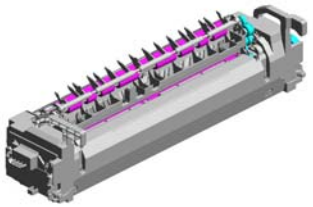

52.D2394012
(EU/AA,KOR/CHN):
FUSING UNIT

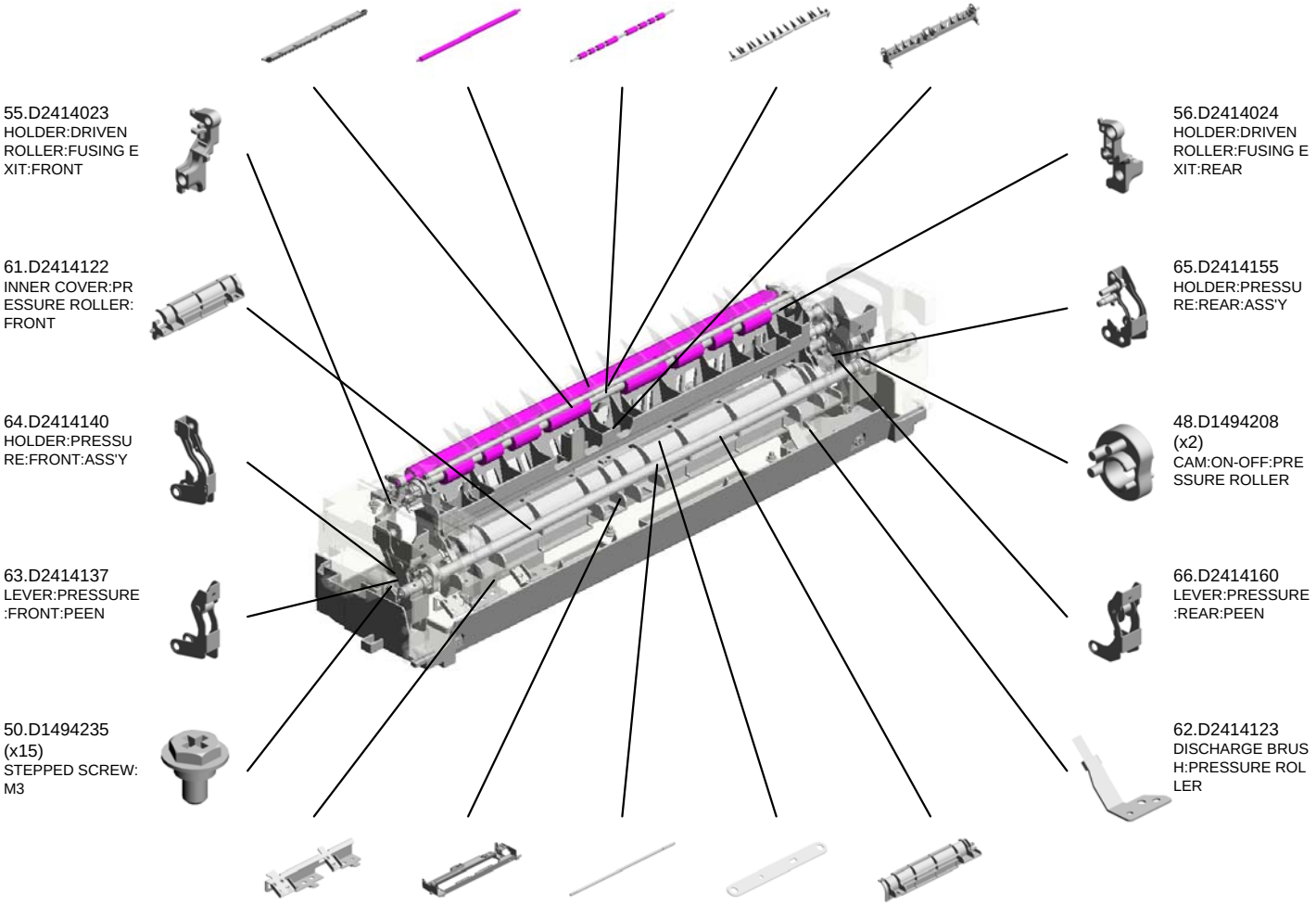

Copyright (c) 2006-2016 Ricoh Company, Ltd. 2016/07/29 Version 1.00

U011_S003
(EU/AA,KOR/CHN):FUSING UNIT

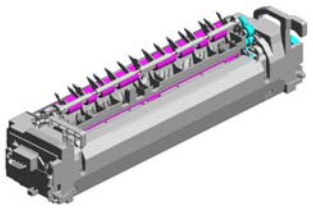

52.D2394012
(EU/AA,KOR/CHN):
FUSING UNIT

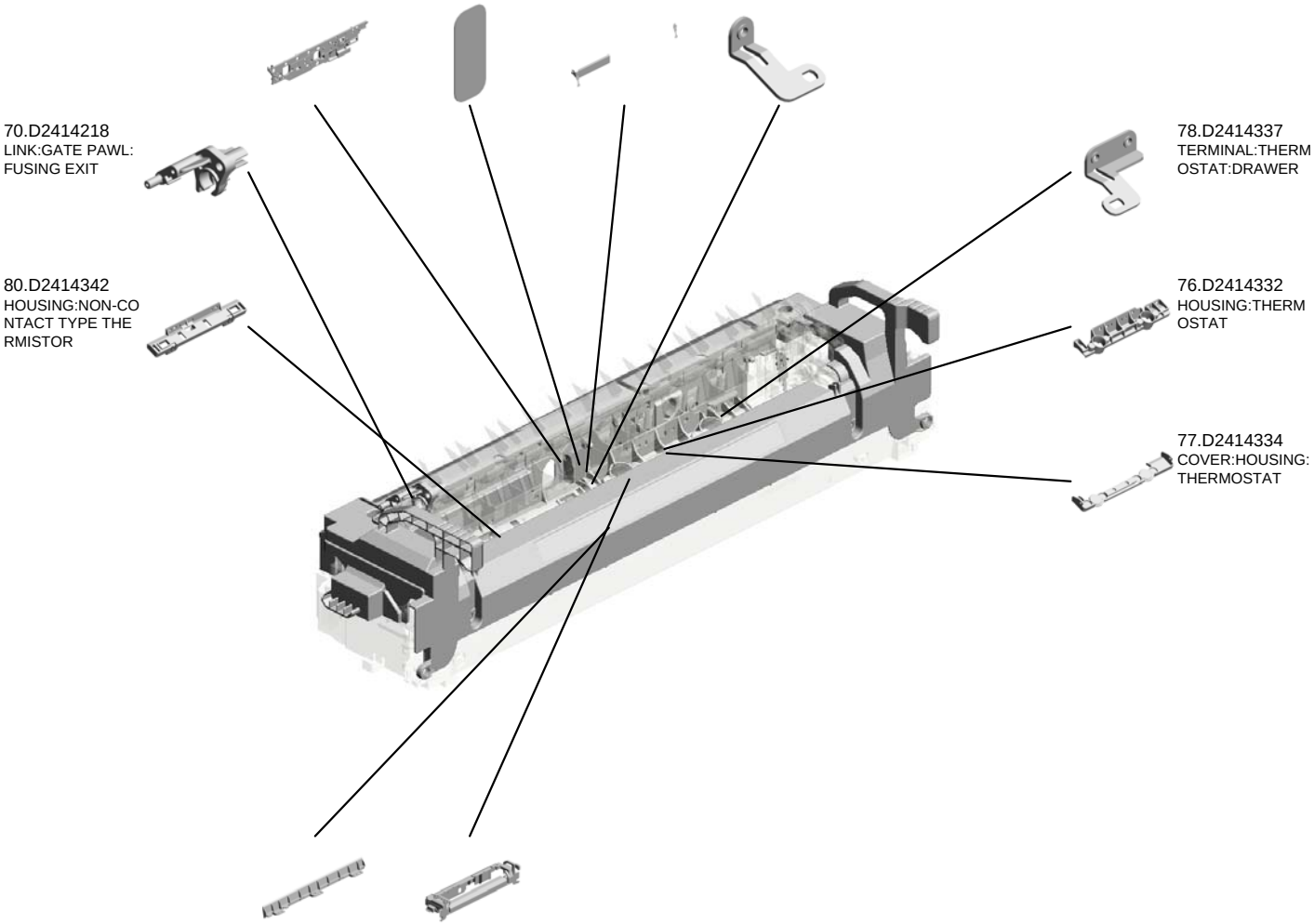

Copyright (c) 2006-2016 Ricoh Company, Ltd. 2016/07/29 Version 1.00

U011_S003_S001
(EU/AA,KOR/CHN):SLEEVE:FUSING

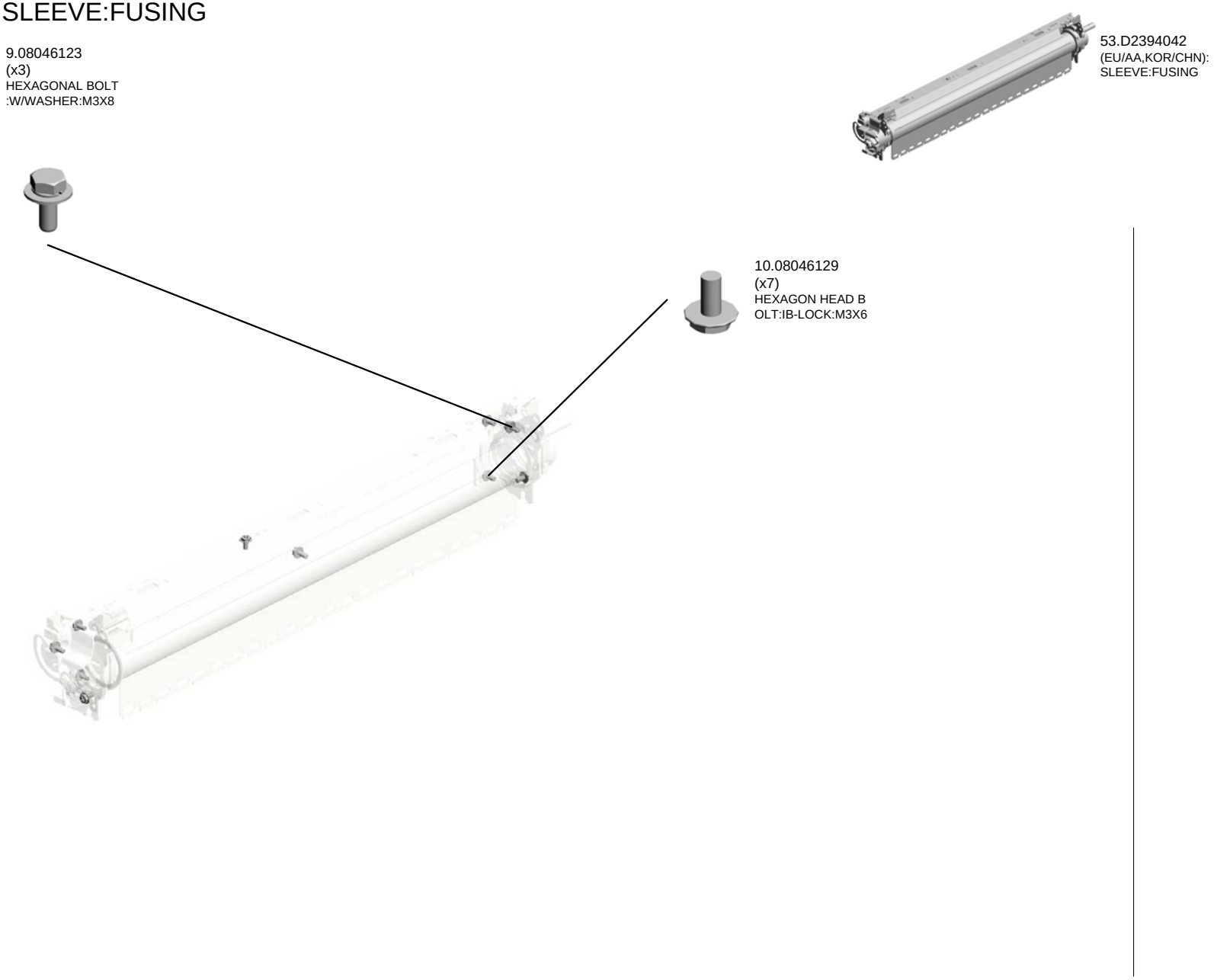

Copyright (c) 2006-2016 Ricoh Company, Ltd. 2016/07/29 Version 1.00

U011_S004
(NA):FUSING UNIT

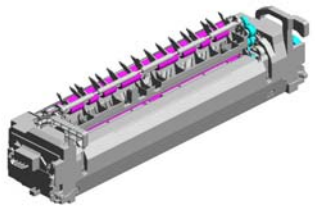

84.D2444011
(NA):FUSING UNIT

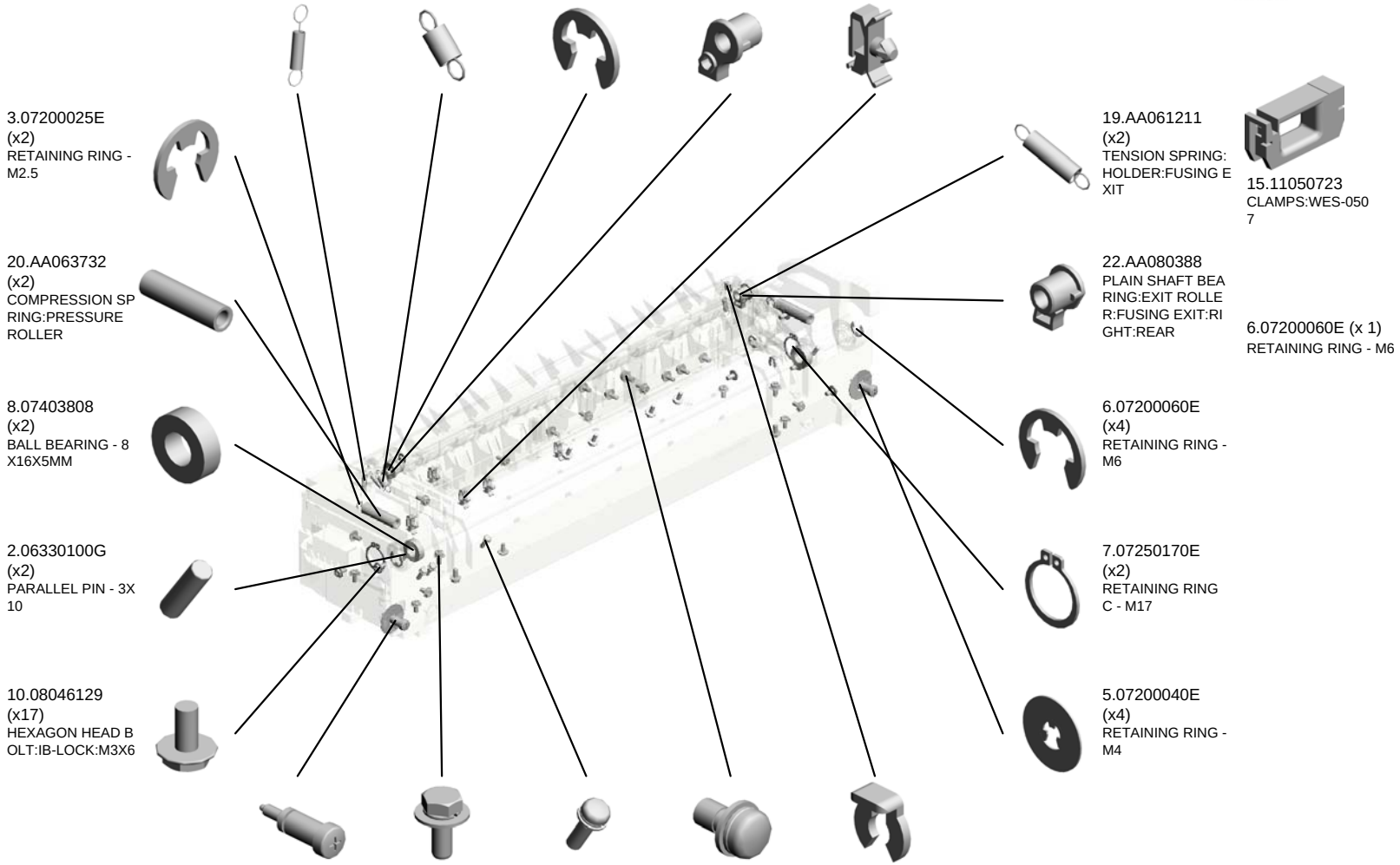

Copyright (c) 2006-2016 Ricoh Company, Ltd. 2016/07/29 Version 1.00

U011_S004
(NA):FUSING UNIT

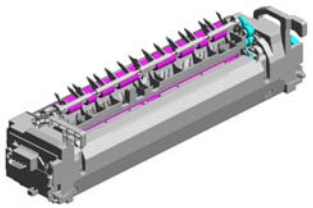

84.D2444011
(NA):FUSING UNIT

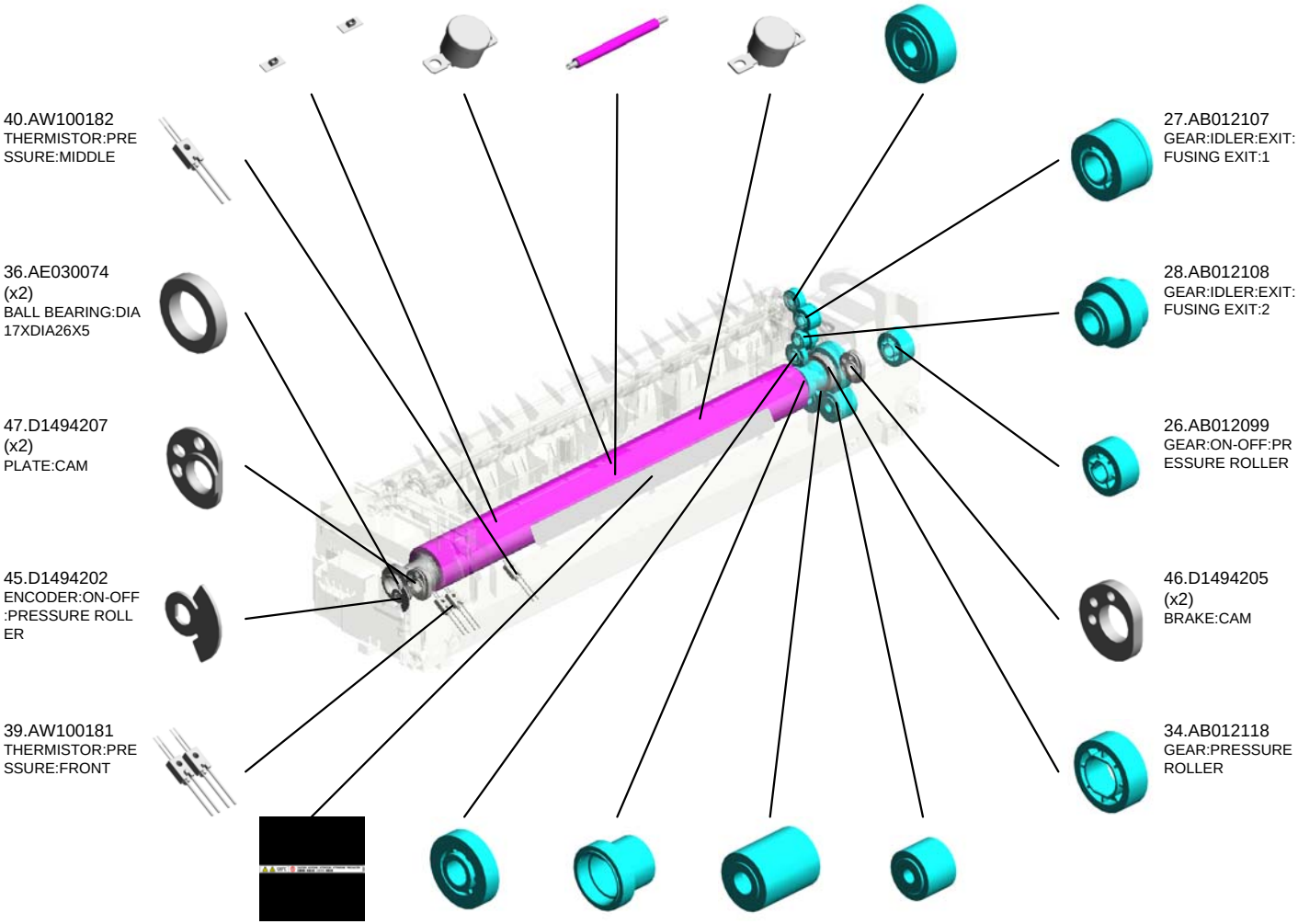

Copyright (c) 2006-2016 Ricoh Company, Ltd. 2016/07/29 Version 1.00

U011_S004
(NA):FUSING UNIT

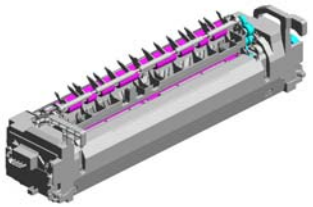

84.D2444011
(NA):FUSING UNIT

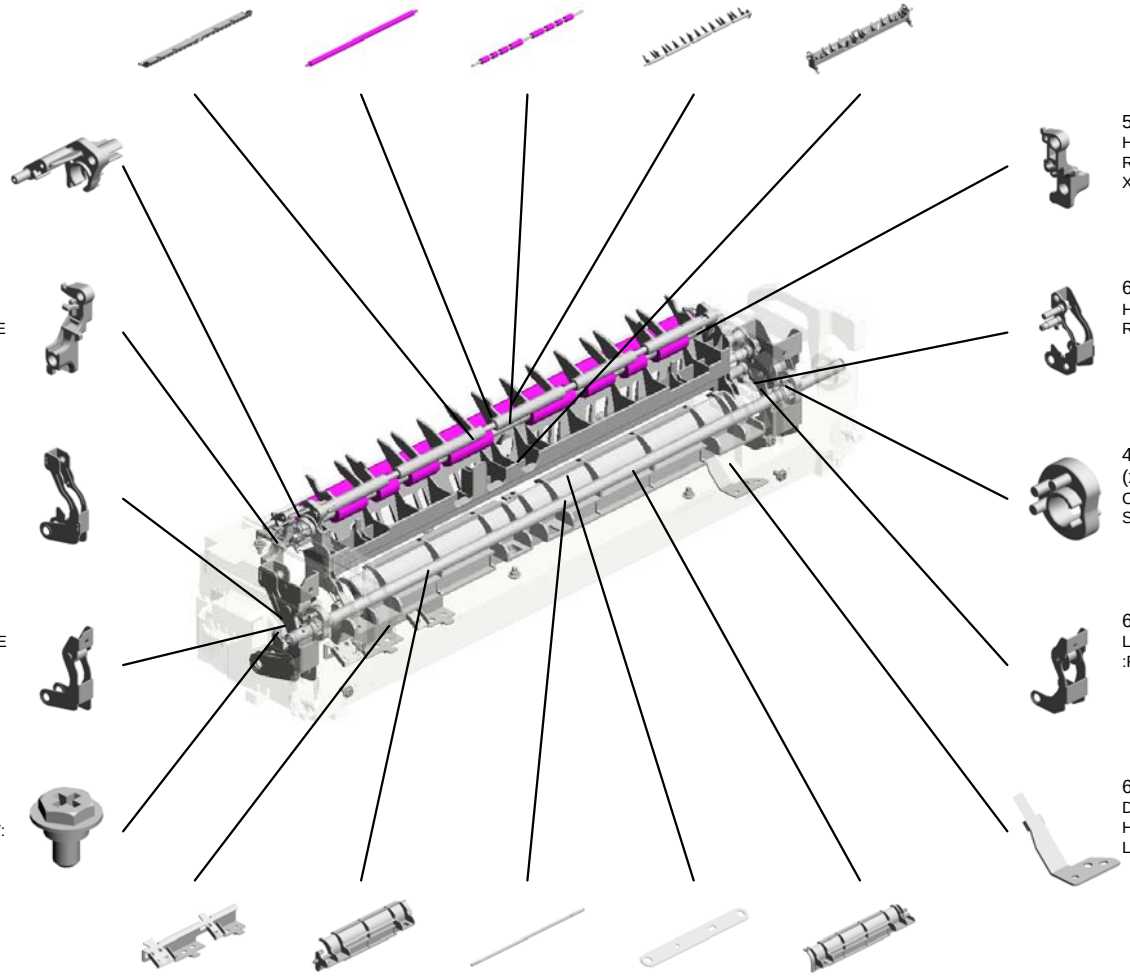

Copyright (c) 2006-2016 Ricoh Company, Ltd. 2016/07/29 Version 1.00

U011_S004
(NA):FUSING UNIT

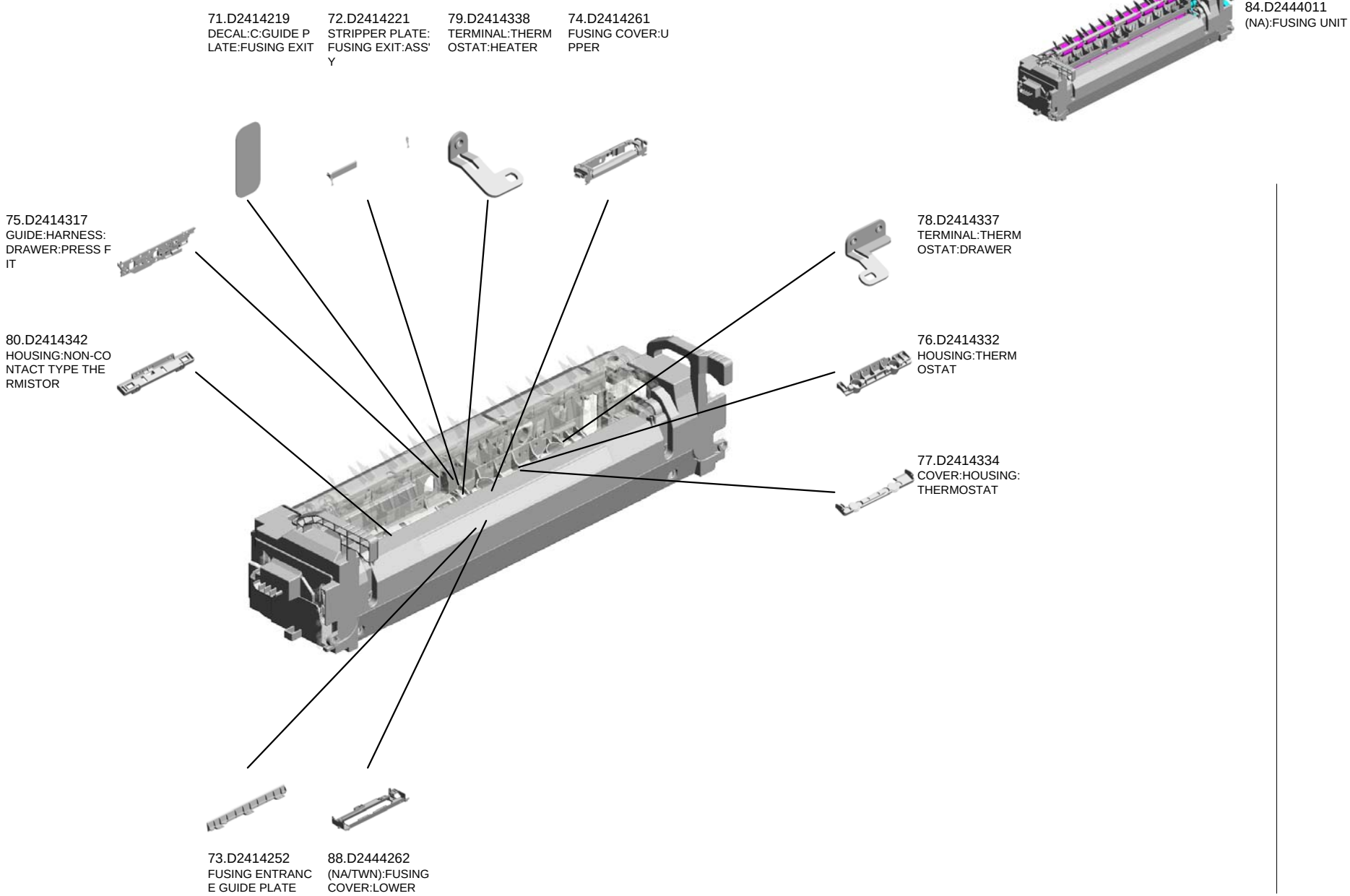

Copyright (c) 2006-2016 Ricoh Company, Ltd. 2016/07/29 Version 1.00

U011_S004_S001
(NA):SLEEVE:FUSING

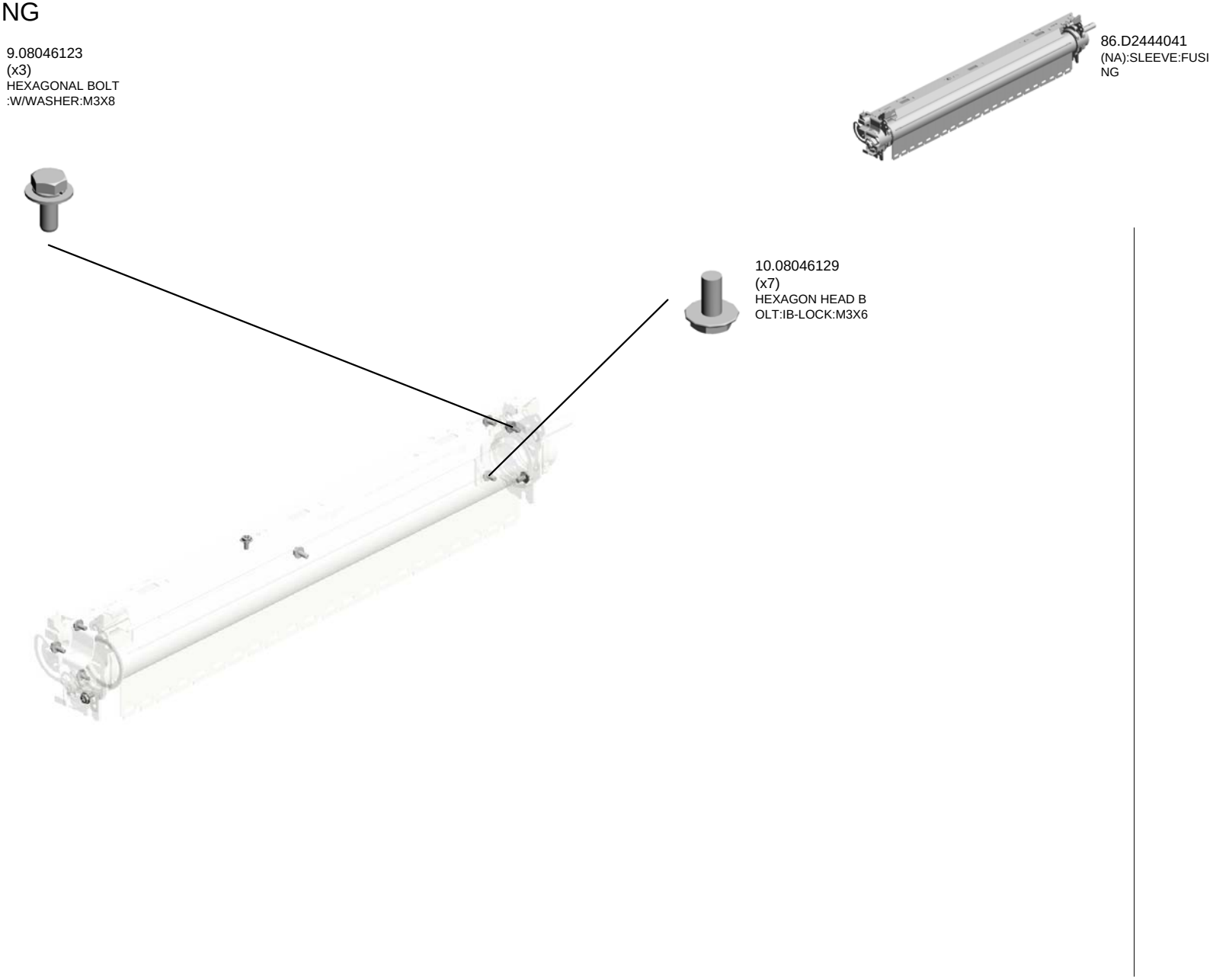

Copyright (c) 2006-2016 Ricoh Company, Ltd. 2016/07/29 Version 1.00

U011_S005
(TWN):FUSING UNIT

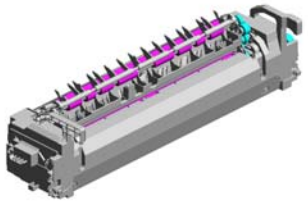

85.D2444013
(TWN):FUSING UNI
T

17.AA061208
(x2)
TENSION SPRING:
STRIPPER PLATE

18.AA061209
TENSION SPRING:
GATE PAWL

4.07200030E
(x3)
RETAINING RING -
M3

21.AA080387
PLAIN SHAFT BEA
RING:EXIT ROLLE
R:FUSING EXIT:RI
GHT:FRONT

14.11050713
(x5)
CLAMP:LWSM-030
6H GRAY

3.07200025E
(x2)
RETAINING RING -
M2.5

20.AA063732
(x2)
COMPRESSION SP
RING:PRESSURE
ROLLER

8.07403808
(x2)
BALL BEARING - 8
X16X5MM

2.06330100G
(x2)
PARALLEL PIN - 3X
10

10.08046129
(x17)
HEXAGON HEAD B
OLT:IB-LOCK:M3X6

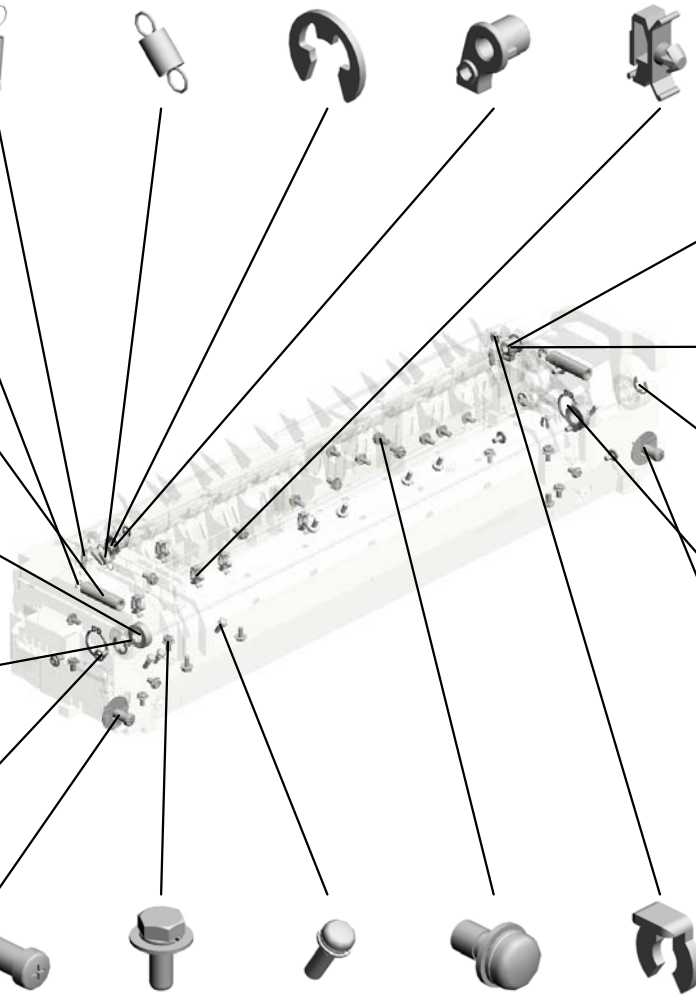

19.AA061211
(x2)
TENSION SPRING:
HOLDER:FUSING E
XIT

15.11050723
CLAMPS:WES-050
7

22.AA080388
PLAIN SHAFT BEA
RING:EXIT ROLLE
R:FUSING EXIT:RI
GHT:REAR

6.07200060E (x 1)
RETAINING RING - M6

6.07200060E
(x4)
RETAINING RING -
M6

7.07250170E
(x2)
RETAINING RING
C - M17

5.07200040E
(x4)
RETAINING RING -
M4

24.AA100018
(x2)
STEPPED SCREW:
FIX:FUSING

9.08046123
(x15)
HEXAGONAL BOLT
:W/WASHER:M3X8

11.09573010N
(x3)
SCREW:SMALL RO
UND/SPRING:M3X1
0

12.09574008N
SCREW:SMALL RO
UND/SPRING:M4X8

23.AA100016
(x2)
RETAINING RINGS
-C:DIA3

Copyright (c) 2006-2016 Ricoh Company, Ltd. 2016/07/29 Version 1.00

U011_S005
(TWN):FUSING UNIT

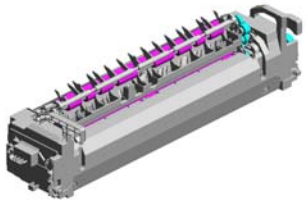

85.D2444013
(TWN):FUSING UNIT

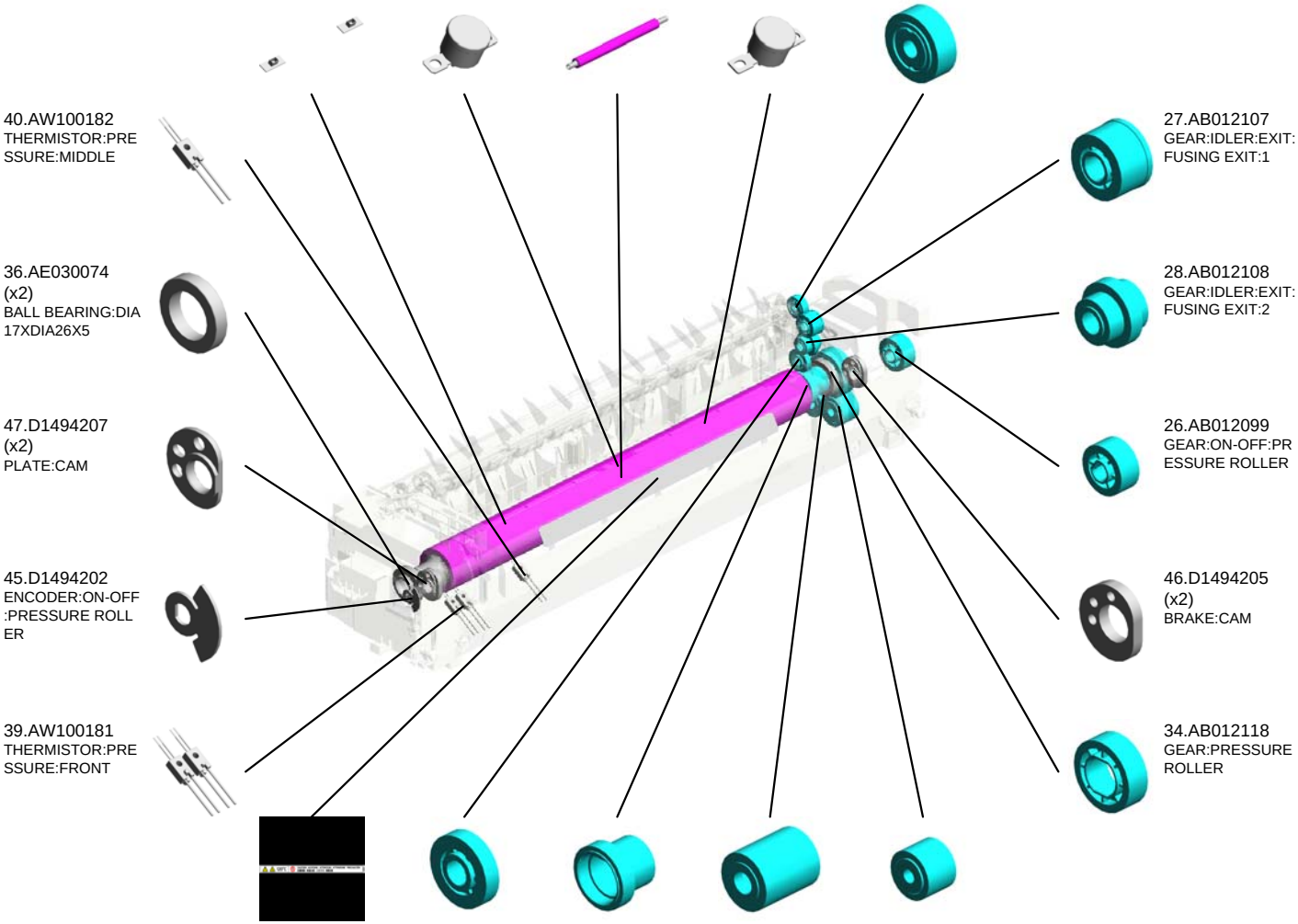

Copyright (c) 2006-2016 Ricoh Company, Ltd. 2016/07/29 Version 1.00

U011_S005
(TWN):FUSING UNIT

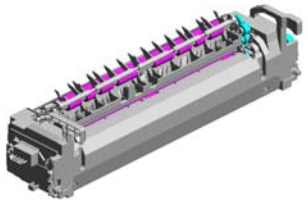

85.D2444013
(TWN):FUSING UNIT

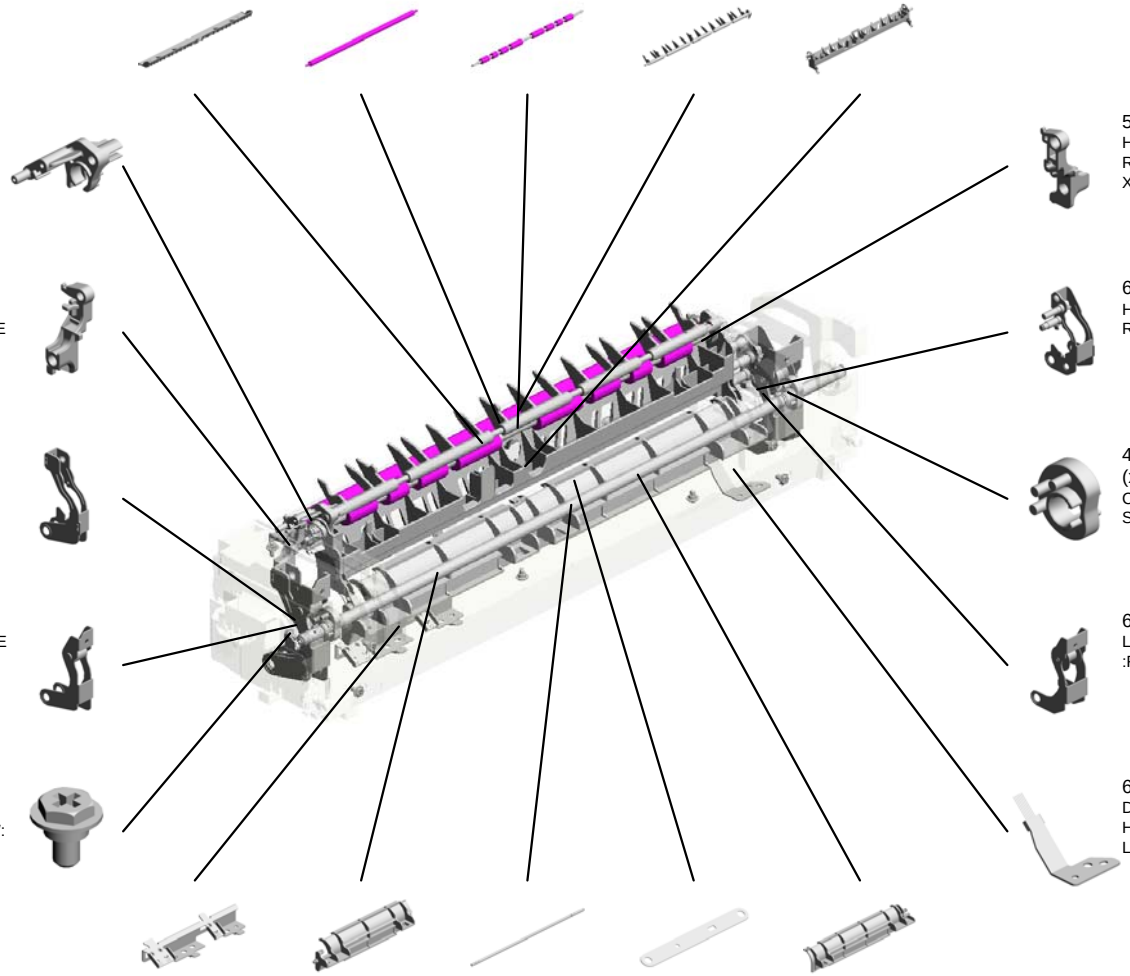

Copyright (c) 2006-2016 Ricoh Company, Ltd. 2016/07/29 Version 1.00

U011_S005
(TWN):FUSING UNIT

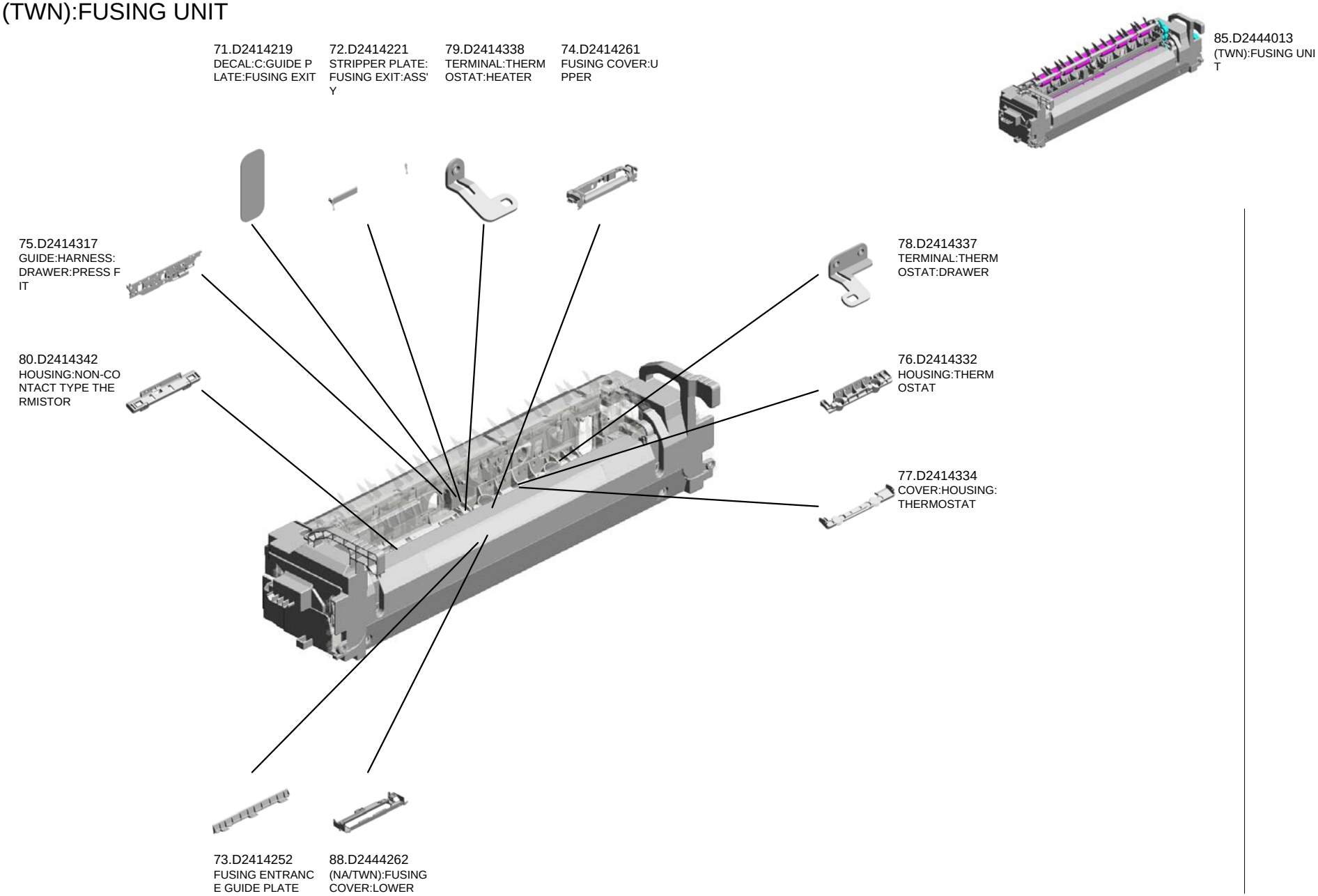

Copyright (c) 2006-2016 Ricoh Company, Ltd. 2016/07/29 Version 1.00

U011_S005_S001
(TWN):SLEEVE:FUSING

Copyright (c) 2006-2016 Ricoh Company, Ltd. 2016/07/29 Version 1.00

U012.PAPER EXIT

U012 S001
D2414950
ROLLER:EXIT:PRESSURE:2T
YPE:ASS'Y

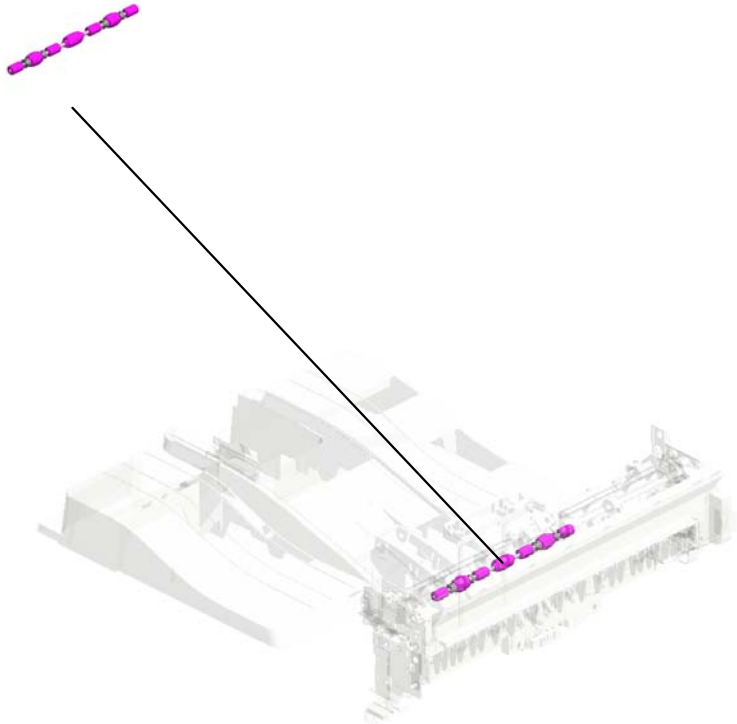

Copyright (c) 2006-2016 Ricoh Company, Ltd. 2016/07/29 Version 1.00

U012
PAPER EXIT

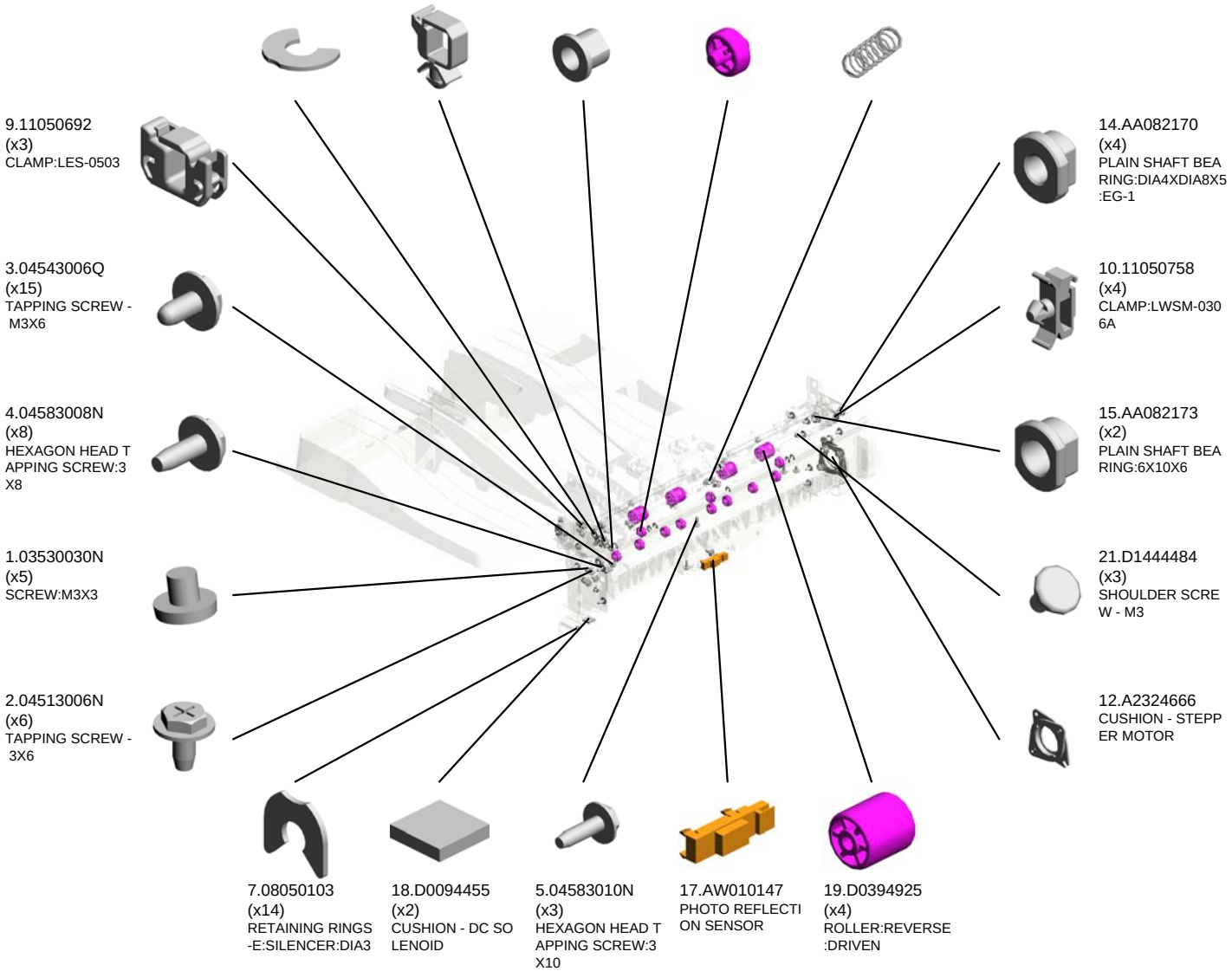

Copyright (c) 2006-2016 Ricoh Company, Ltd. 2016/07/29 Version 1.00

U012
PAPER EXIT

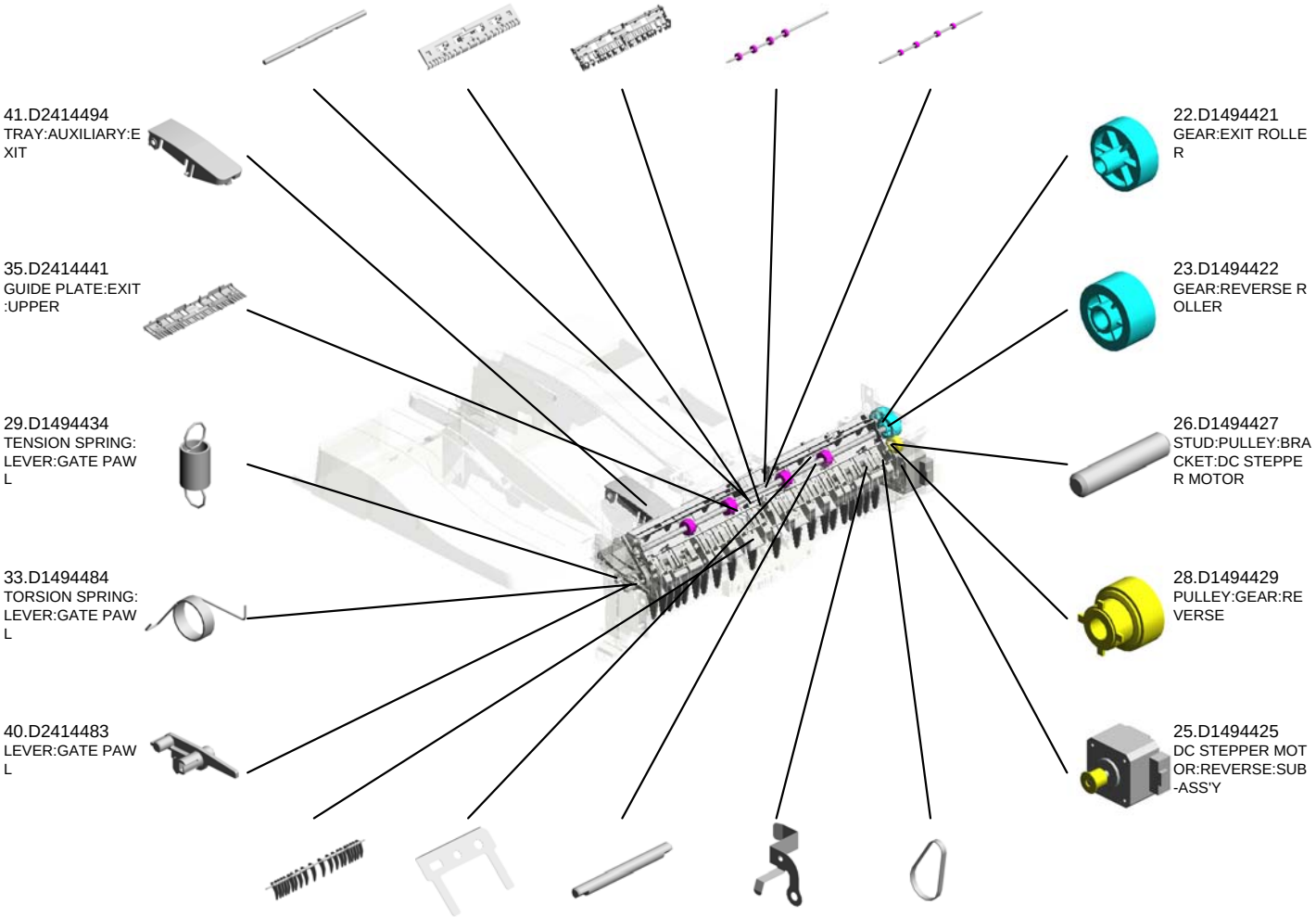

Copyright (c) 2006-2016 Ricoh Company, Ltd. 2016/07/29 Version 1.00

U012
PAPER EXIT

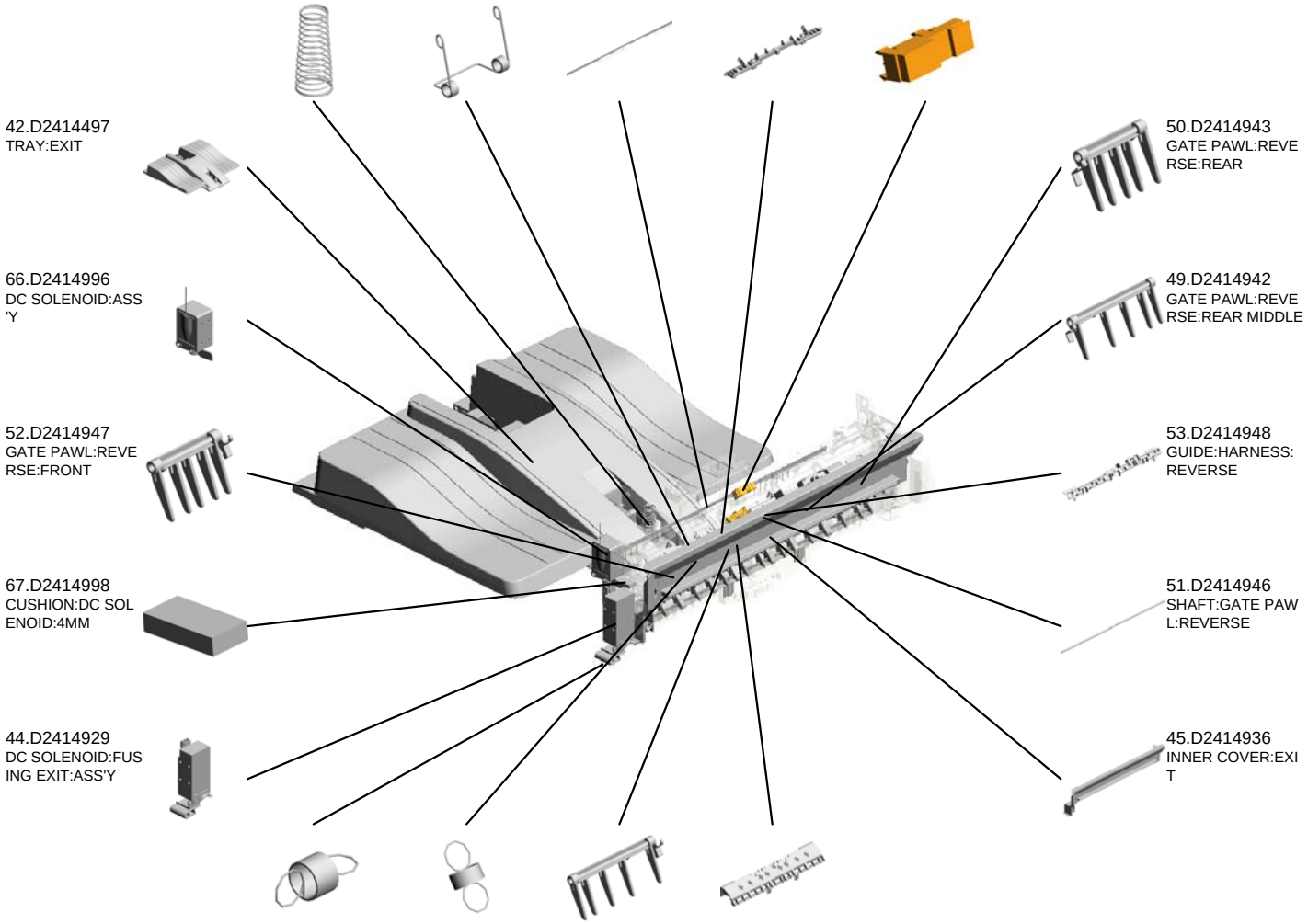

Copyright (c) 2006-2016 Ricoh Company, Ltd. 2016/07/29 Version 1.00

U012_S001
ROLLER:EXIT:PRESSURE:2TYPE:ASS'Y

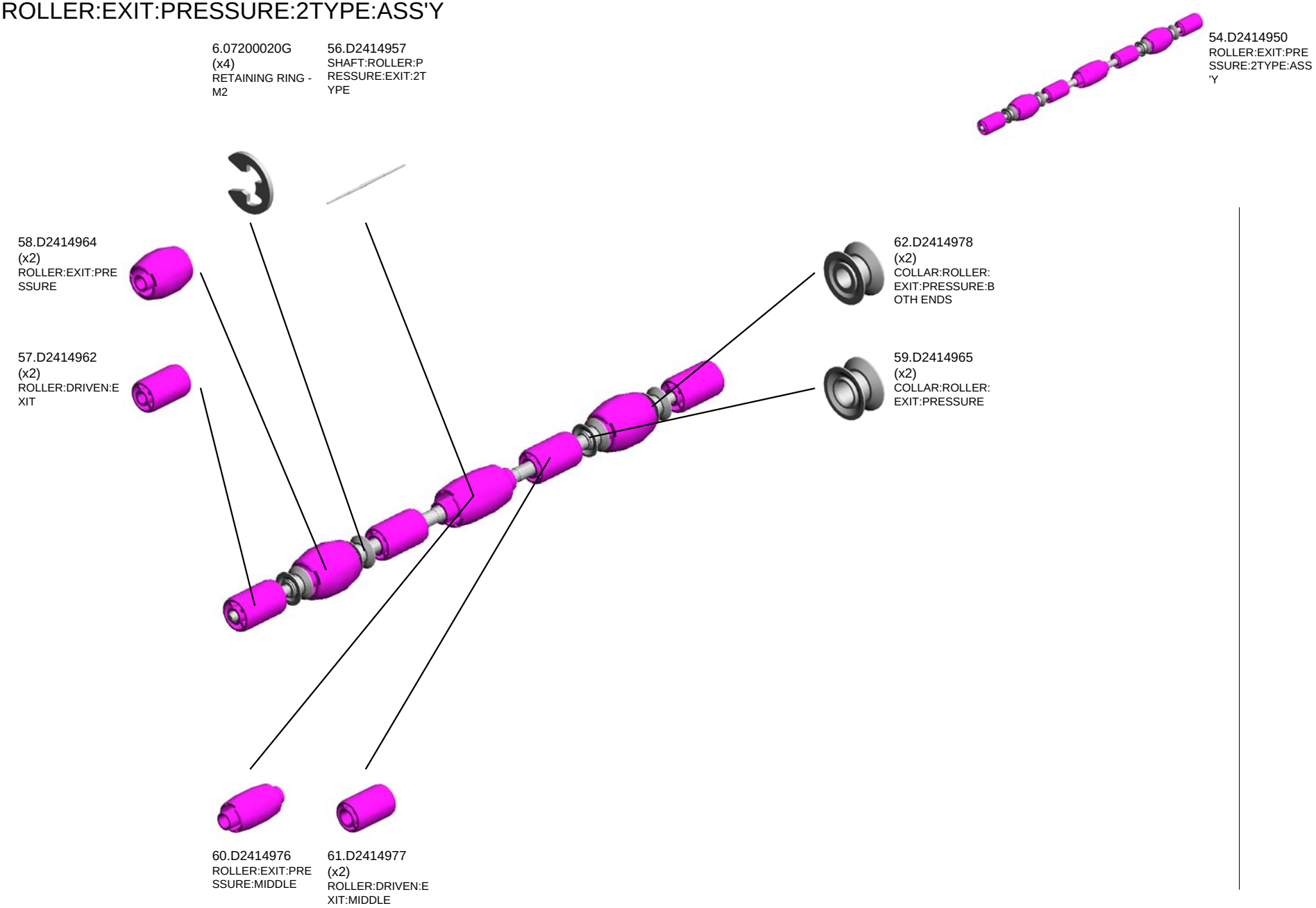

Copyright (c) 2006-2016 Ricoh Company, Ltd. 2016/07/29 Version 1.00

U013.DUPLEX

U013 S001
D2444511
DUPLEX UNIT:ASS'Y

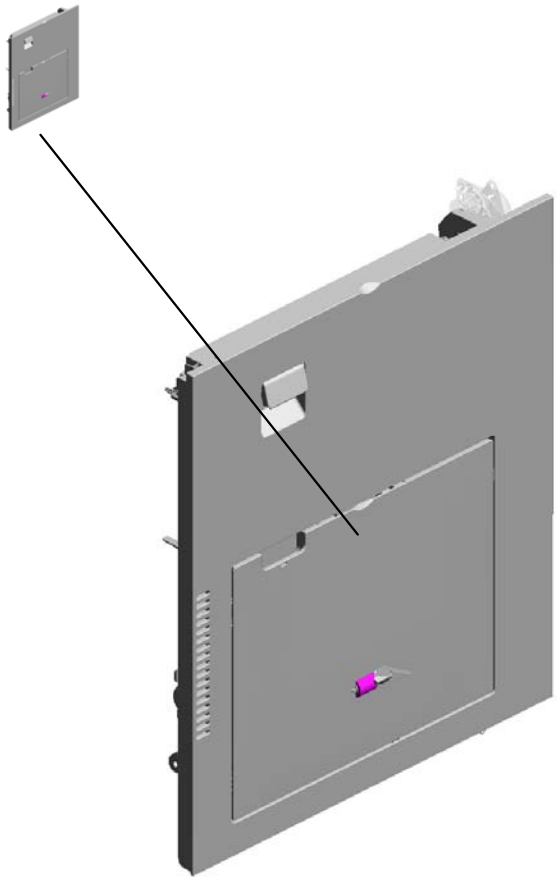

Copyright (c) 2006-2016 Ricoh Company, Ltd. 2016/07/29 Version 1.00

U013_S001.DUPLEX UNIT:ASS'Y

U013_S001_S001
D2412627
MANUAL FEED TABLE:ASS'Y

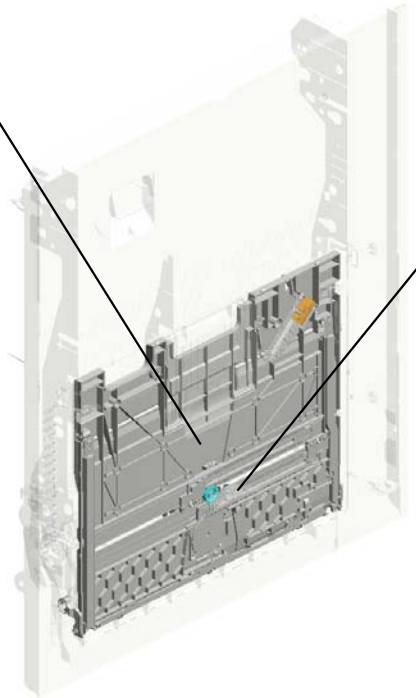

U013_S001_S002
D1494770
SHAFT:SEPARATOR:DRIVEN
:ASS'Y

Copyright (c) 2006-2016 Ricoh Company, Ltd. 2016/07/29 Version 1.00

U013_S001_S001.MANUAL FEED TABLE:ASS'Y

U013 S001 S001 S001
D2412630
SIDE FENCE:FRONT:ASS'Y

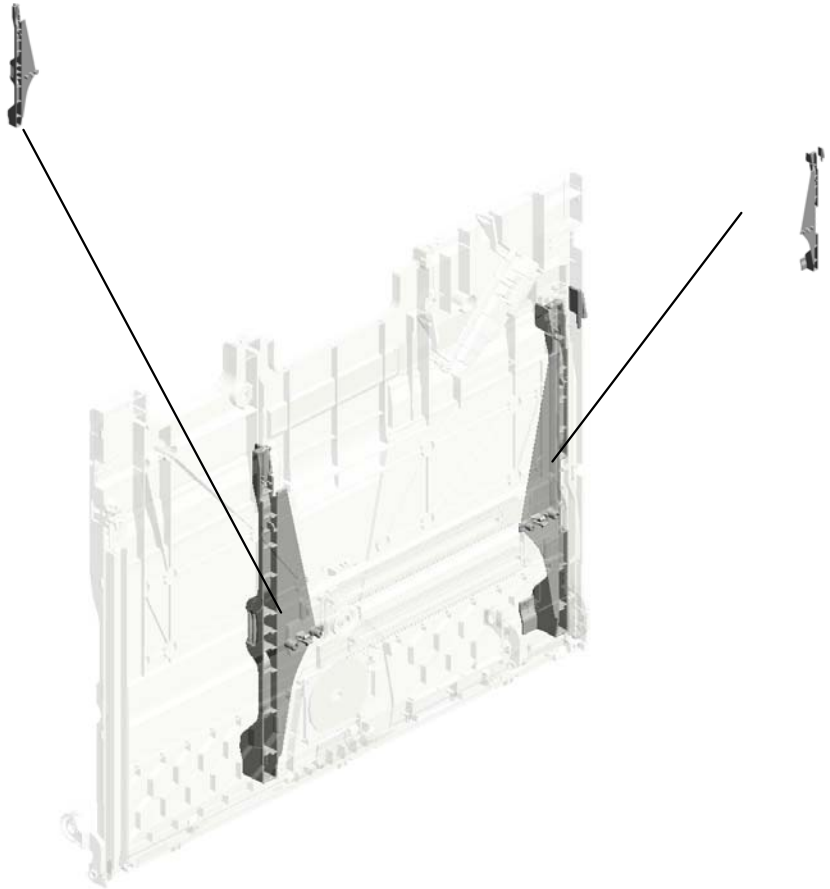

U013_S001_S001_S002
D2412632
SIDE FENCE:REAR:ASS'Y

Copyright (c) 2006-2016 Ricoh Company, Ltd. 2016/07/29 Version 1.00

U013
DUPLEX

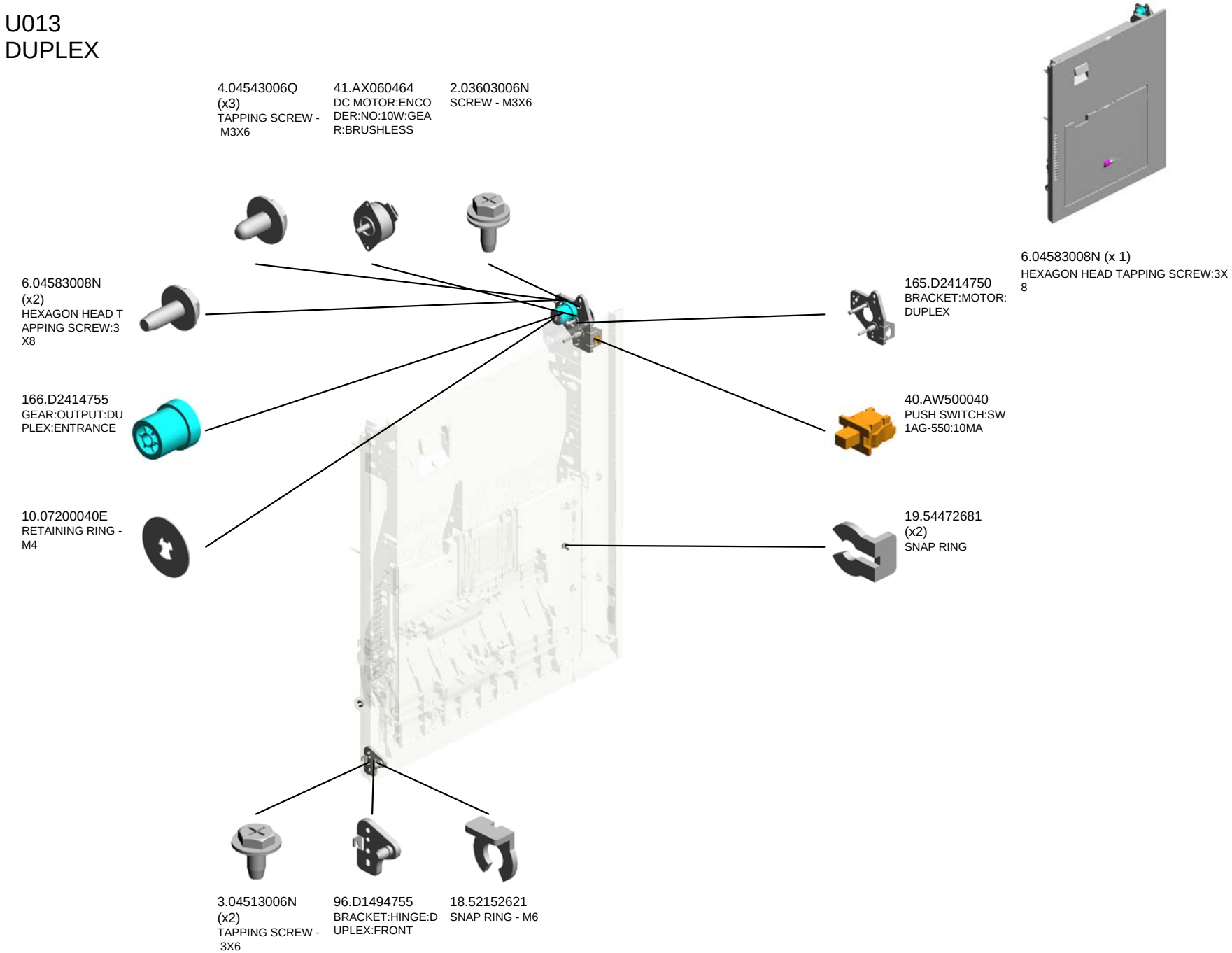

Copyright (c) 2006-2016 Ricoh Company, Ltd. 2016/07/29 Version 1.00

U013_S001
DUPLEX UNIT:ASS'Y

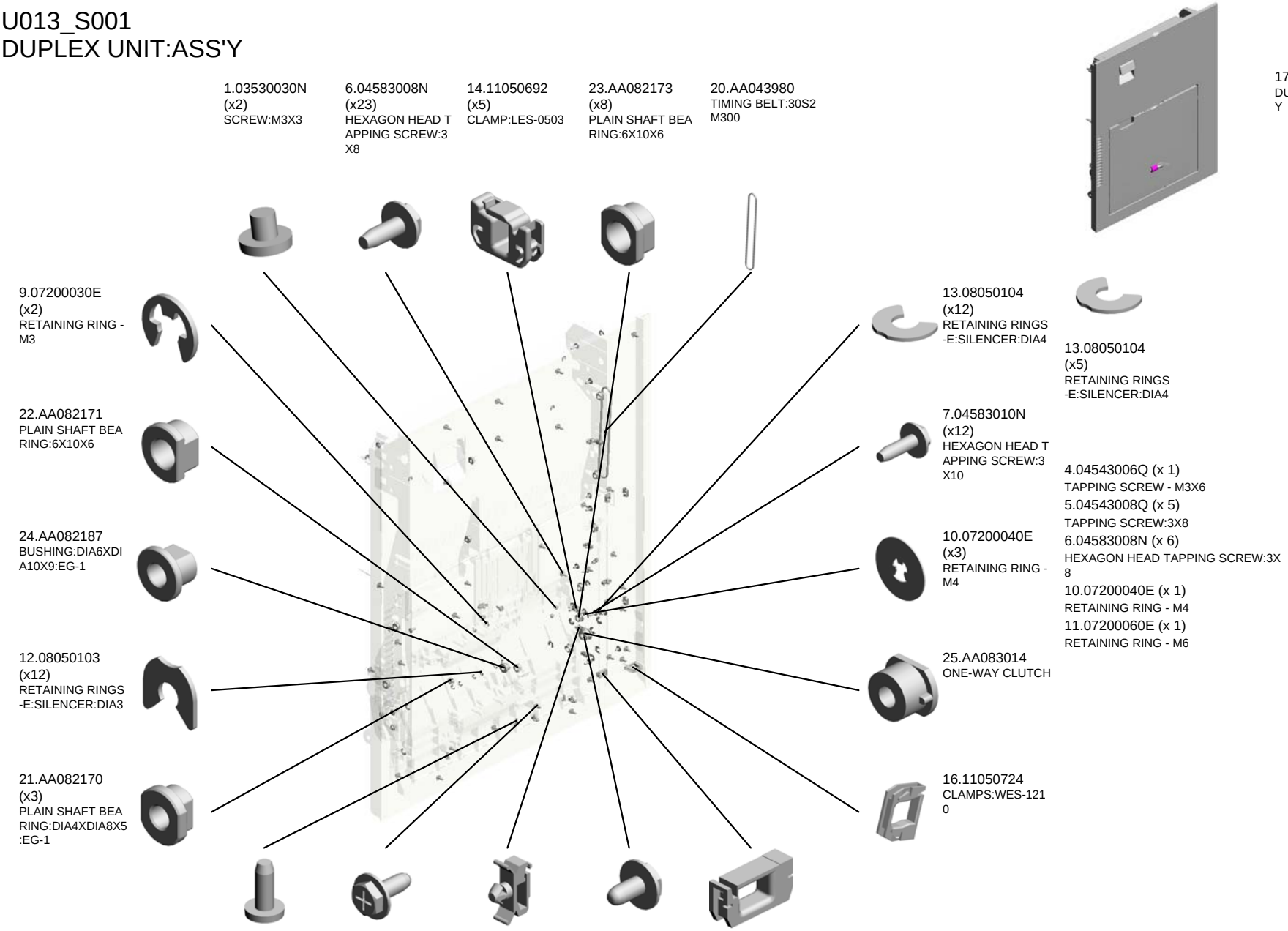

Copyright (c) 2006-2016 Ricoh Company, Ltd. 2016/07/29 Version 1.00

U013_S001
DUPLEX UNIT:ASS'Y

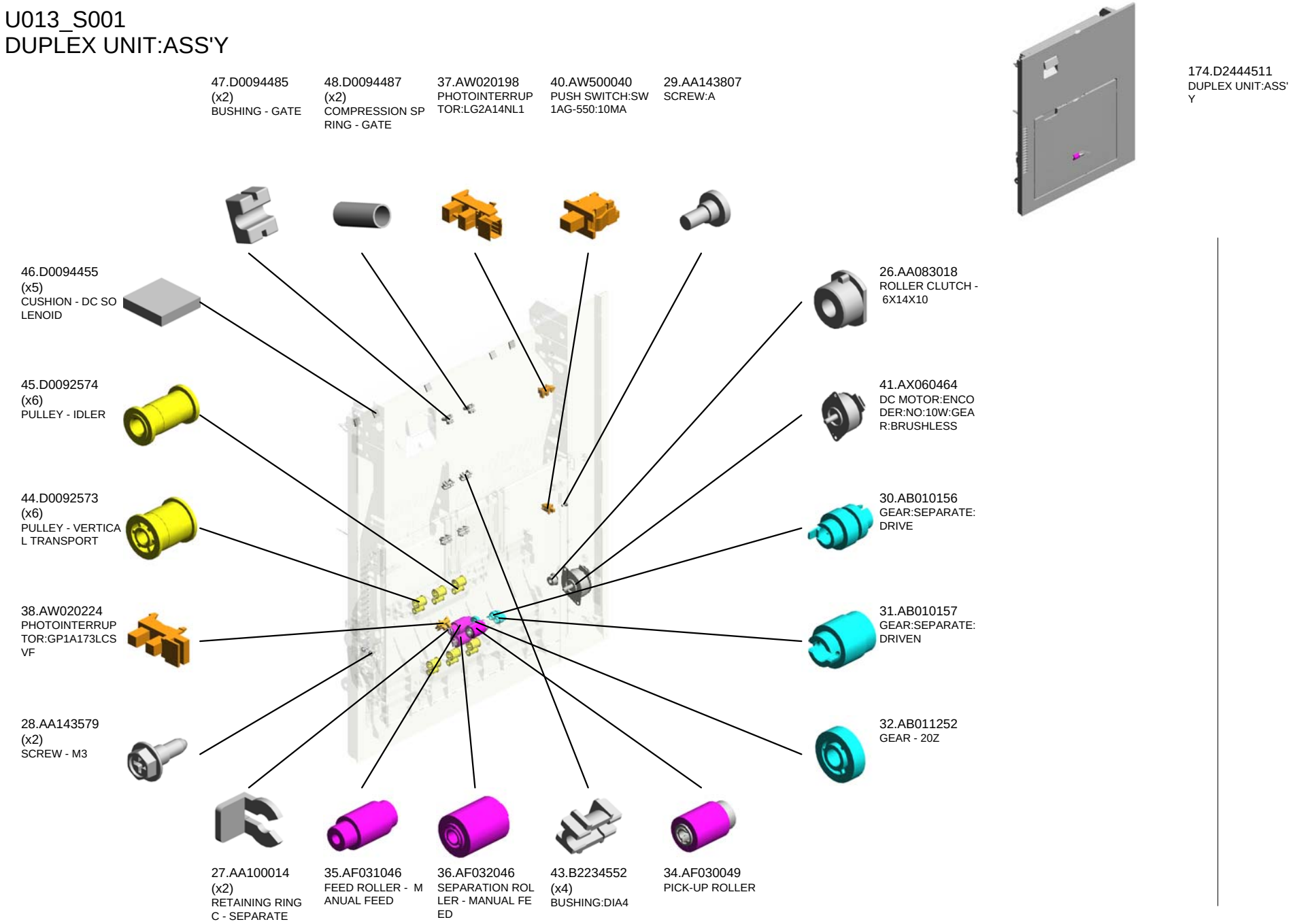

Copyright (c) 2006-2016 Ricoh Company, Ltd. 2016/07/29 Version 1.00

U013_S001
DUPLEX UNIT:ASS'Y

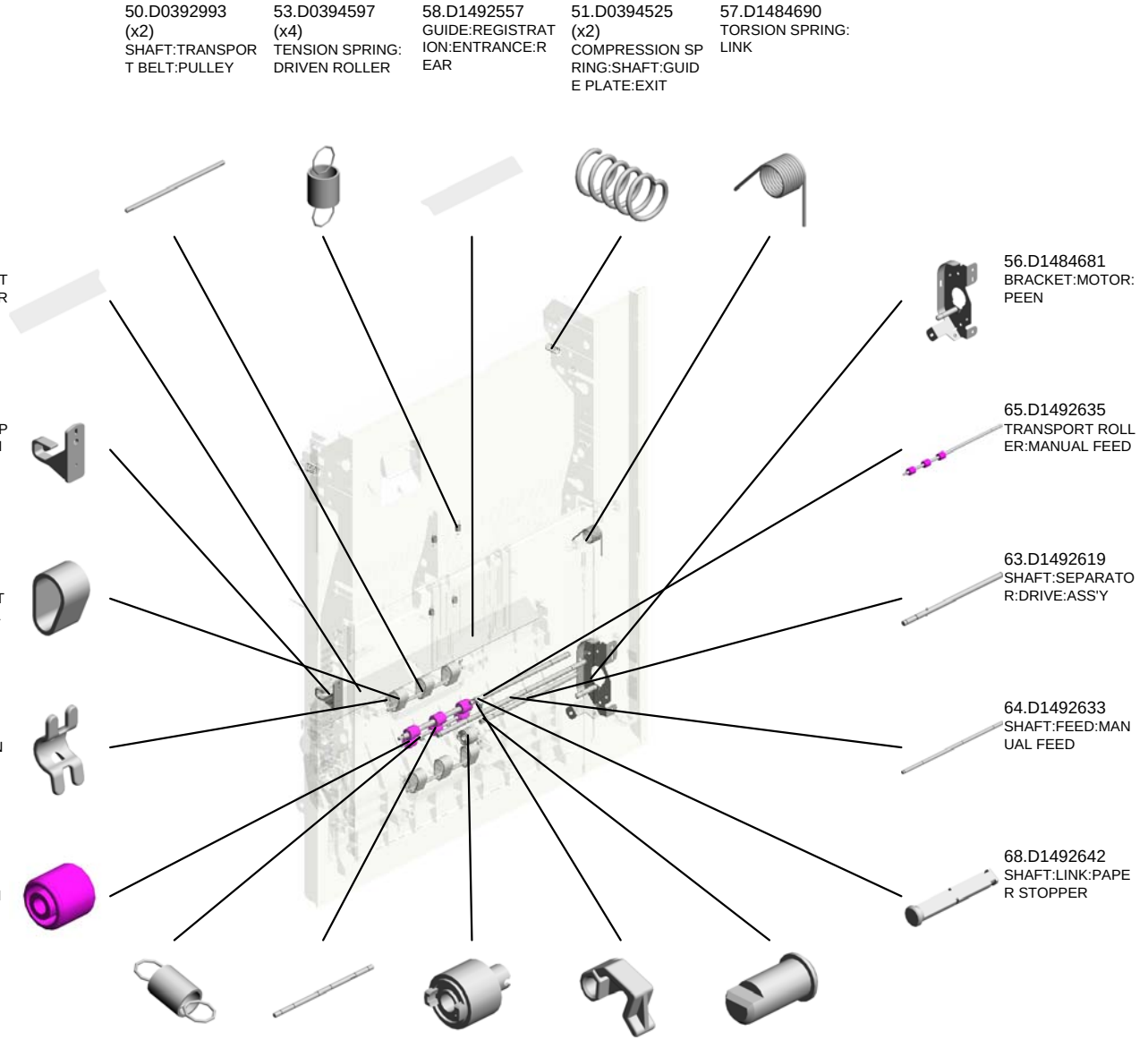

174.D2444511
DUPLEX UNIT:ASS'Y

Copyright (c) 2006-2016 Ricoh Company, Ltd. 2016/07/29 Version 1.00

U013_S001
DUPLEX UNIT:ASS'Y

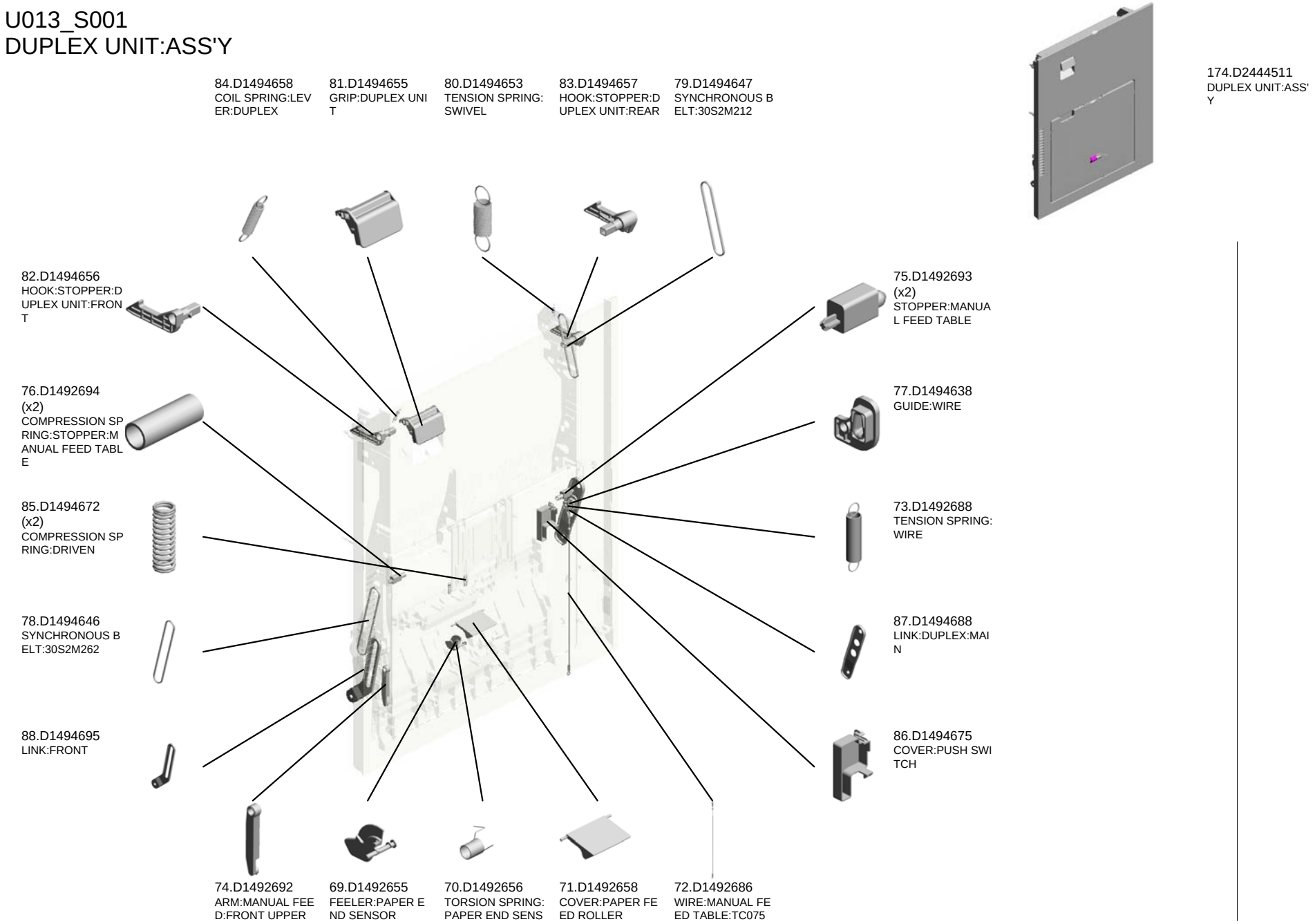

Copyright (c) 2006-2016 Ricoh Company, Ltd. 2016/07/29 Version 1.00

U013_S001
DUPLEX UNIT:ASS'Y

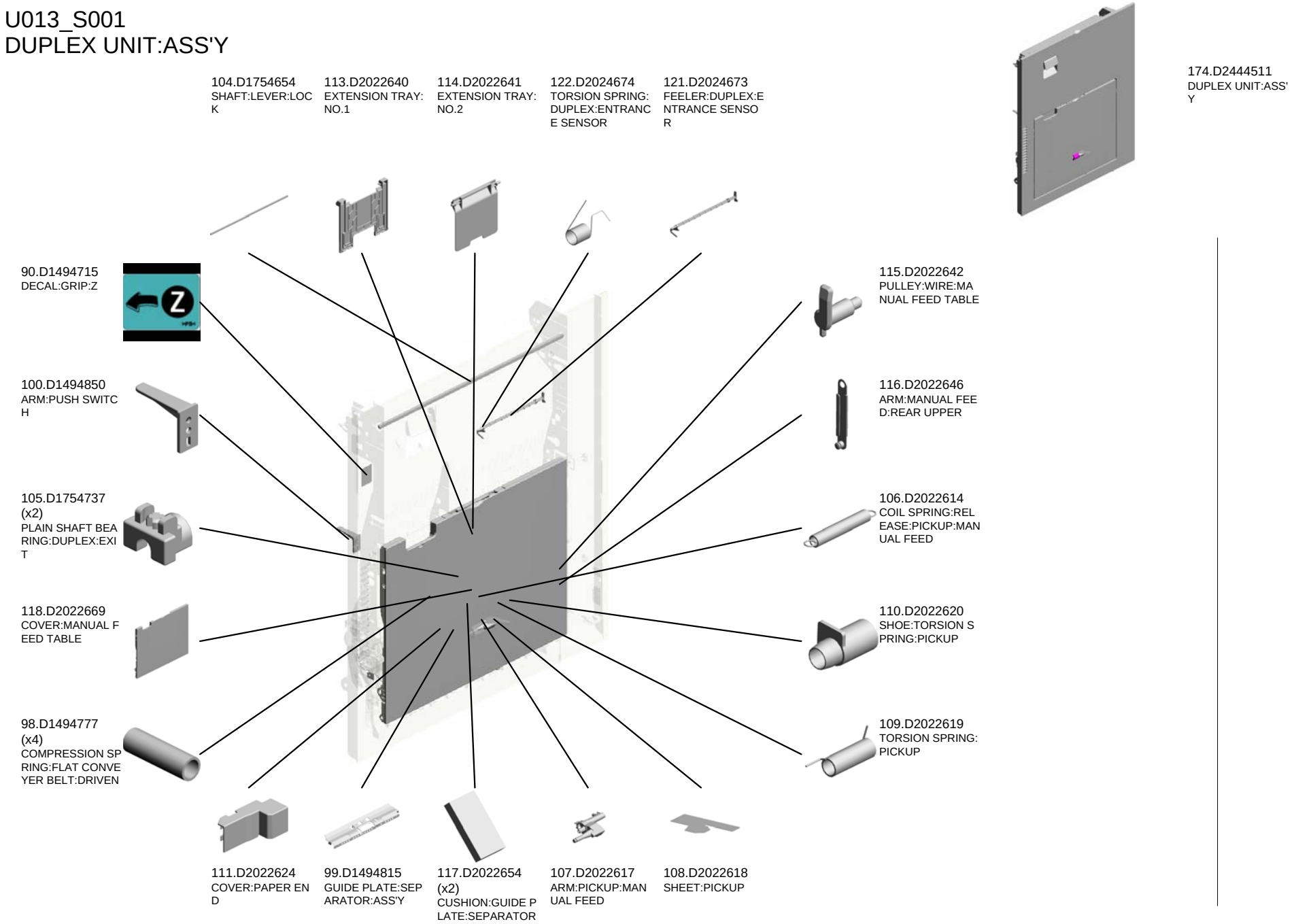

Copyright (c) 2006-2016 Ricoh Company, Ltd. 2016/07/29 Version 1.00

U013_S001
DUPLEX UNIT:ASS'Y

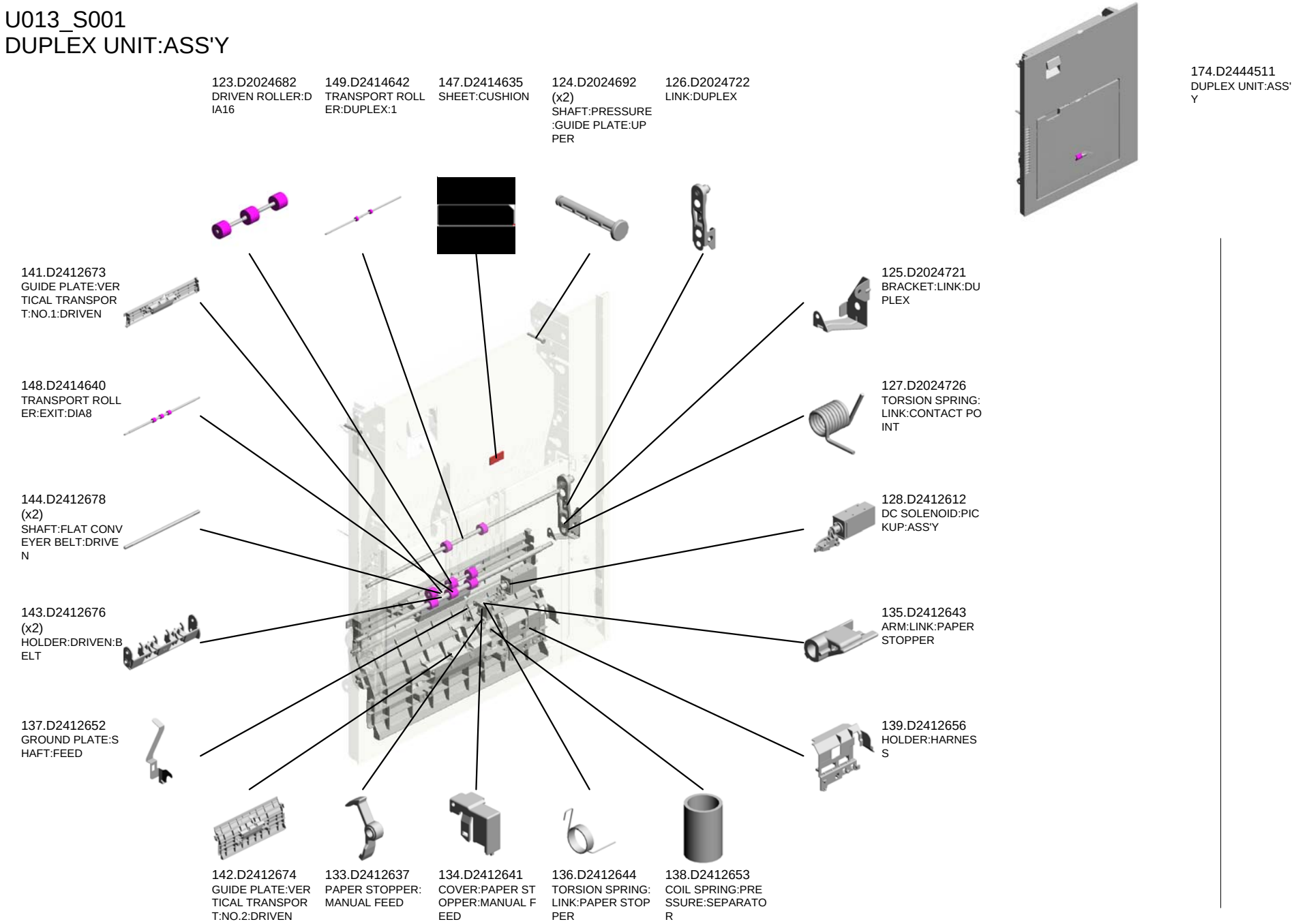

Copyright (c) 2006-2016 Ricoh Company, Ltd. 2016/07/29 Version 1.00

U013_S001
DUPLEX UNIT:ASS'Y

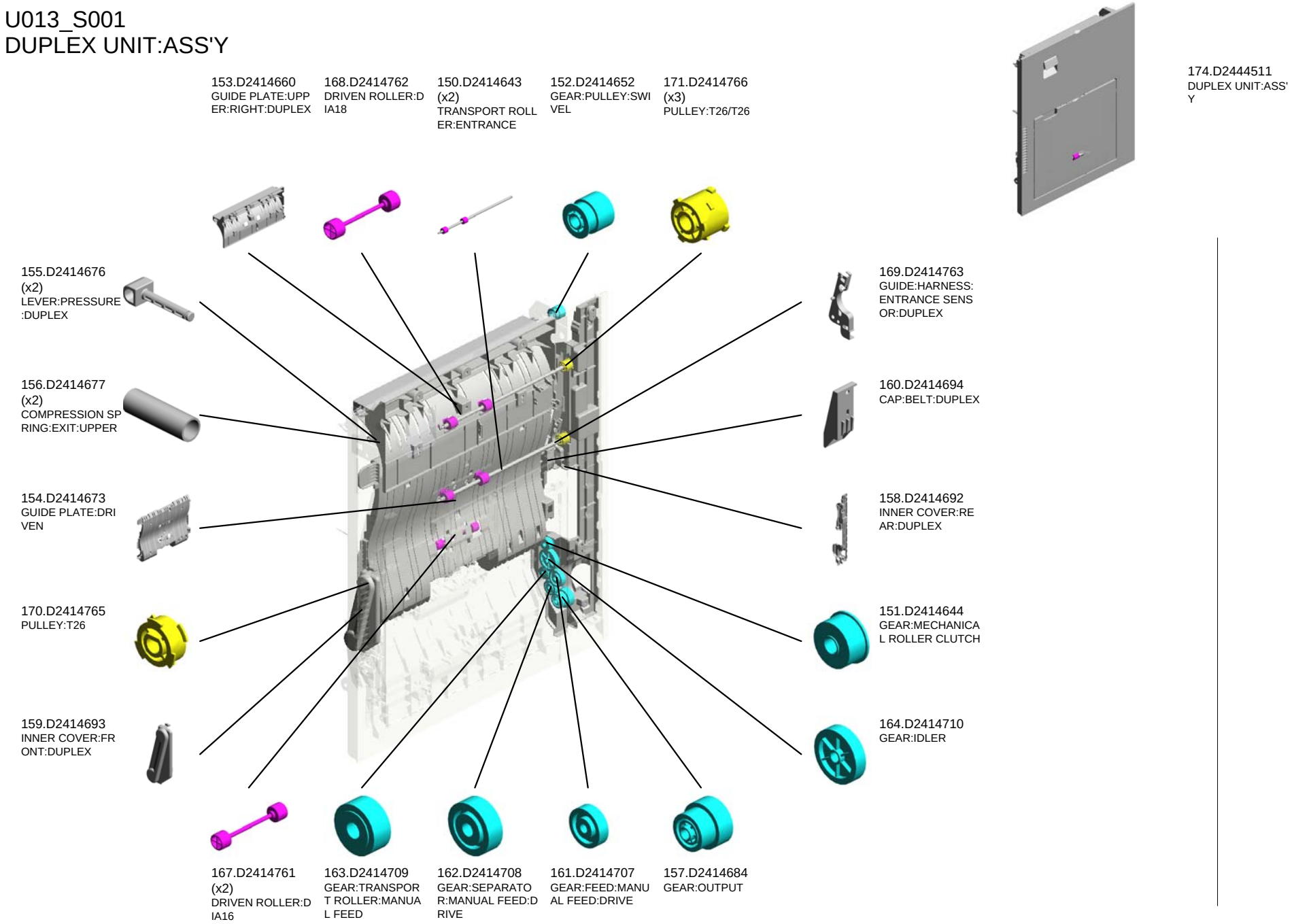

Copyright (c) 2006-2016 Ricoh Company, Ltd. 2016/07/29 Version 1.00

U013_S001
DUPLEX UNIT:ASS'Y

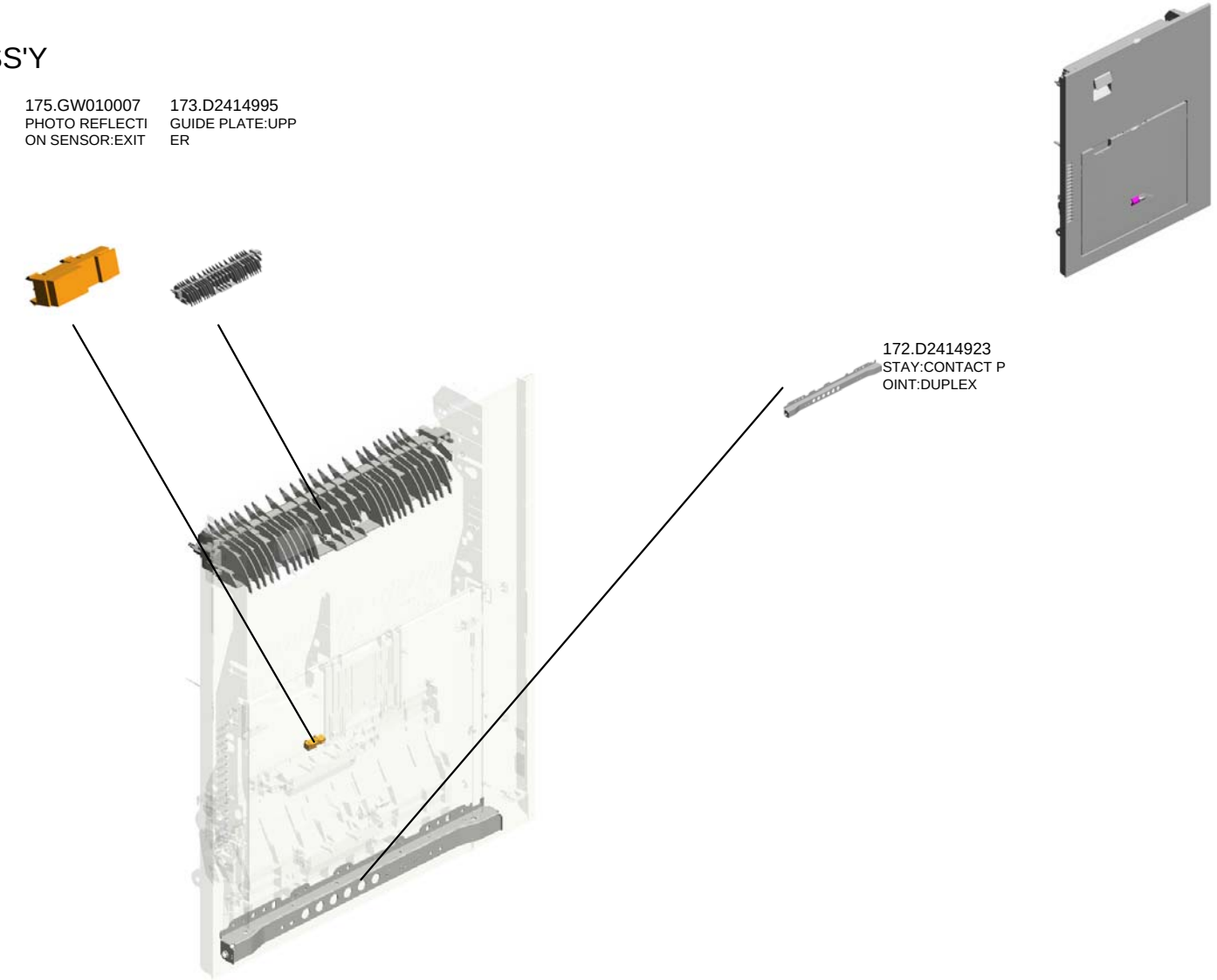

Copyright (c) 2006-2016 Ricoh Company, Ltd. 2016/07/29 Version 1.00

U013_S001_S001
MANUAL FEED TABLE:ASS'Y

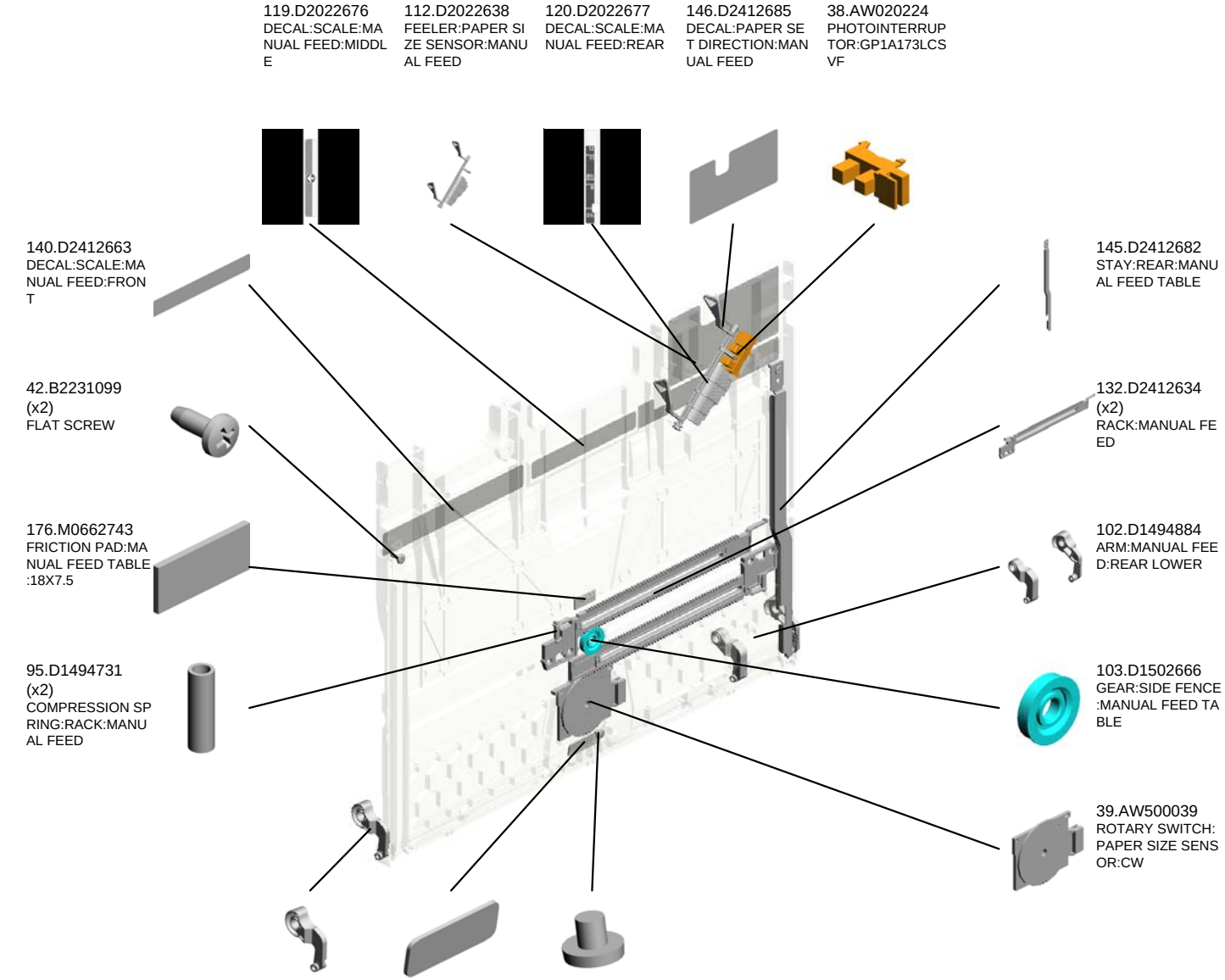

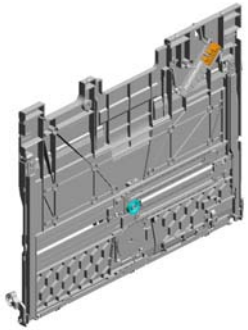

129.D2412627
MANUAL FEED TABLE:ASS'Y

Copyright (c) 2006-2016 Ricoh Company, Ltd. 2016/07/29 Version 1.00

U013_S001_S001_S001
SIDE FENCE:FRONT:ASS'Y

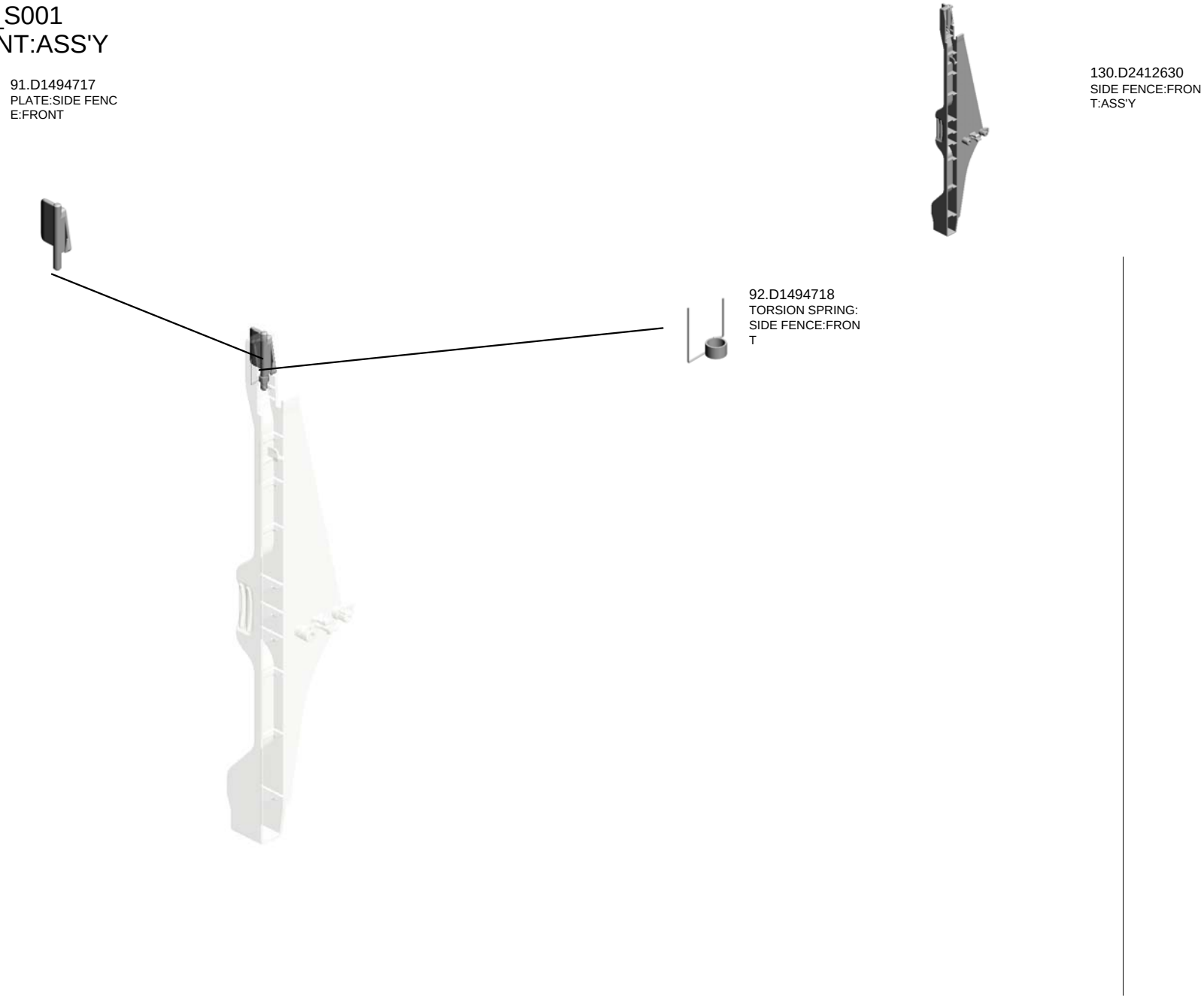

Copyright (c) 2006-2016 Ricoh Company, Ltd. 2016/07/29 Version 1.00

U013_S001_S001_S002
SIDE FENCE:REAR:ASS'Y

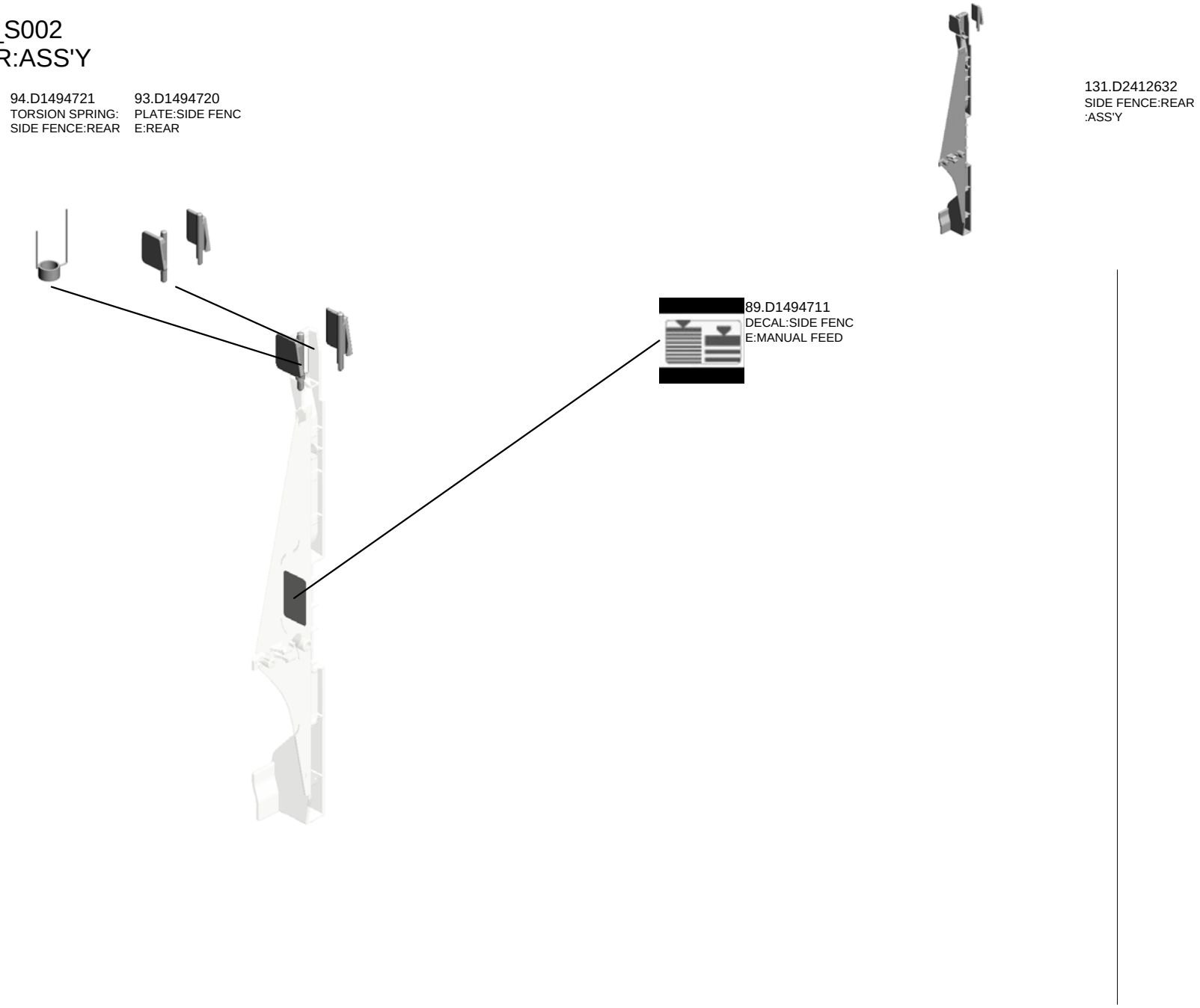

Copyright (c) 2006-2016 Ricoh Company, Ltd. 2016/07/29 Version 1.00

U013_S001_S002
SHAFT:SEPARATOR:DRIVEN:ASS'Y

97.D1494770
SHAFT:SEPARATOR:DRIVEN:ASS'Y

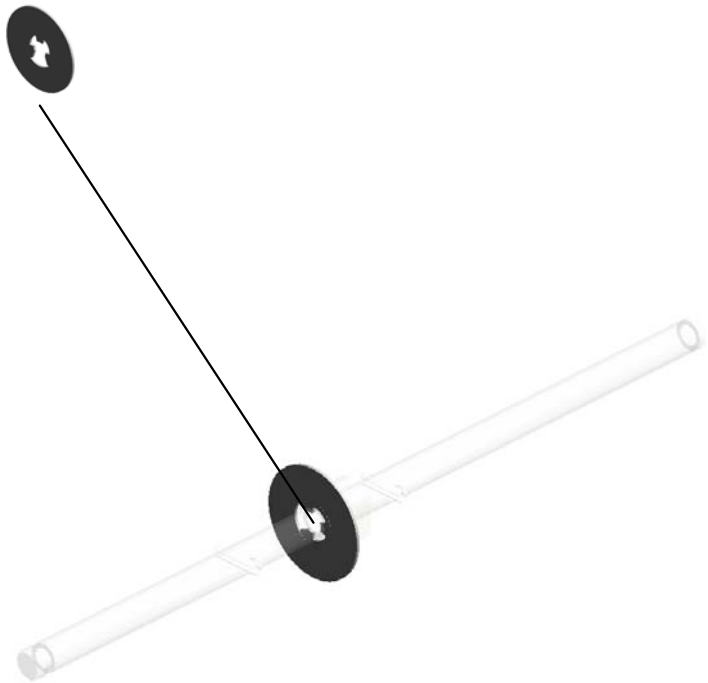

Copyright (c) 2006-2016 Ricoh Company, Ltd. 2016/07/29 Version 1.00

U014.MAIN DRIVE

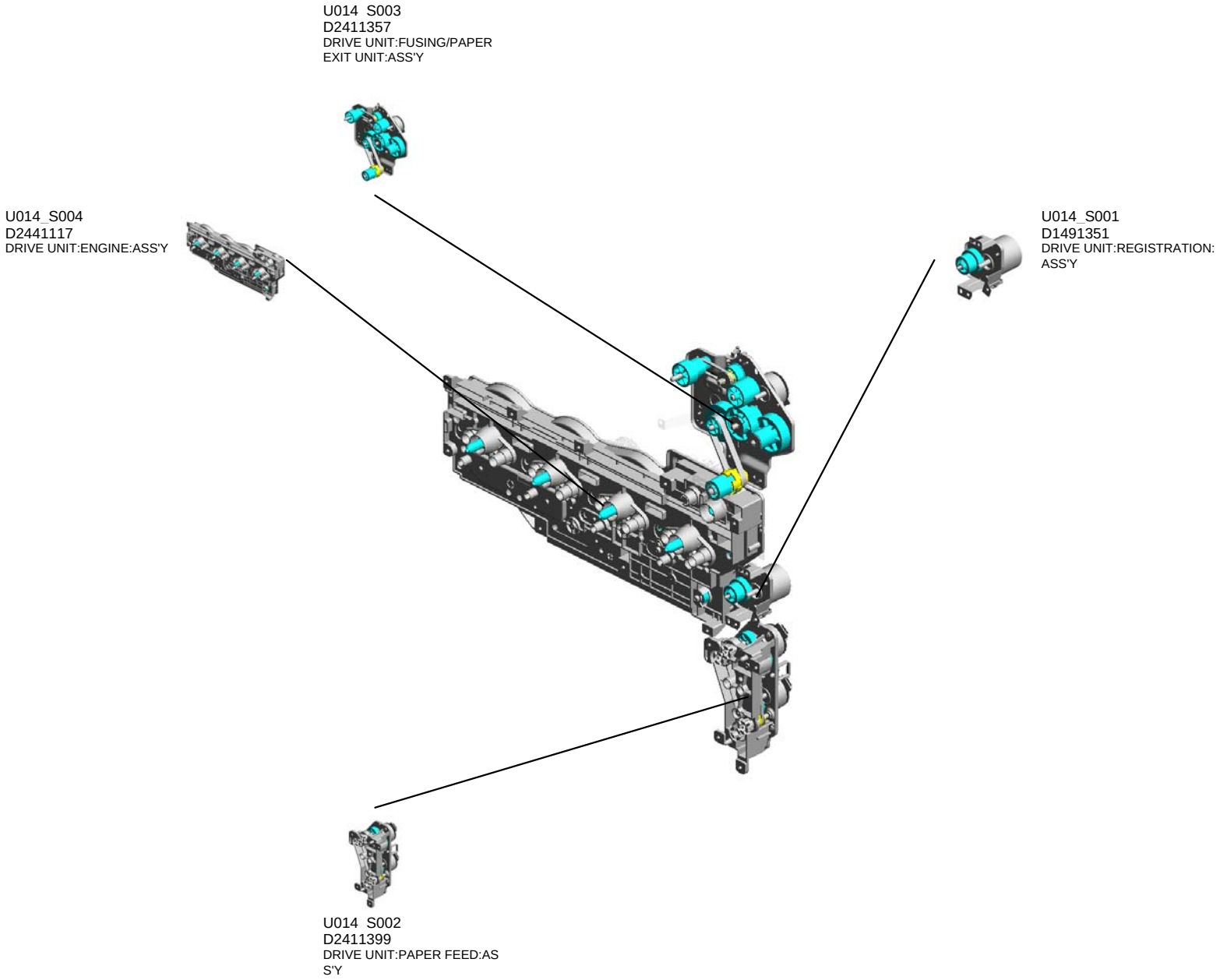

Copyright (c) 2006-2016 Ricoh Company, Ltd. 2016/07/29 Version 1.00

U014_S002.DRIVE UNIT:PAPER FEED:ASS'Y

U014 S002 S001
D2021152
BRACKET:DRIVE UNIT:PAPE
R FEED:ASS'Y

Copyright (c) 2006-2016 Ricoh Company, Ltd. 2016/07/29 Version 1.00

U014
MAIN DRIVE

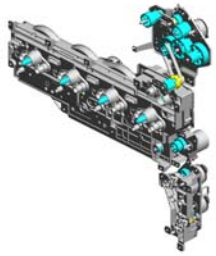

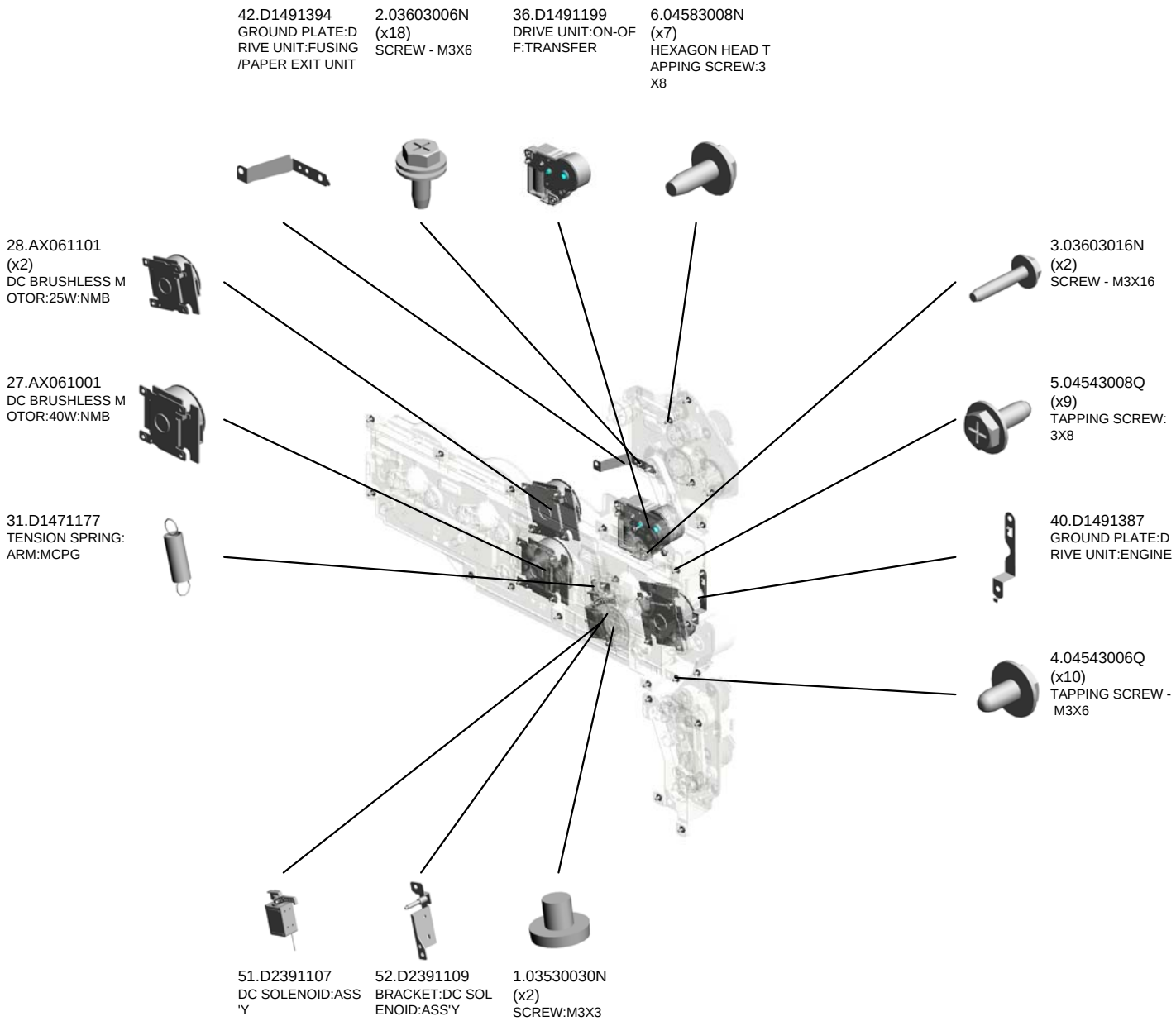

Copyright (c) 2006-2016 Ricoh Company, Ltd. 2016/07/29 Version 1.00

U014_S001
DRIVE UNIT:REGISTRATION:ASS'Y

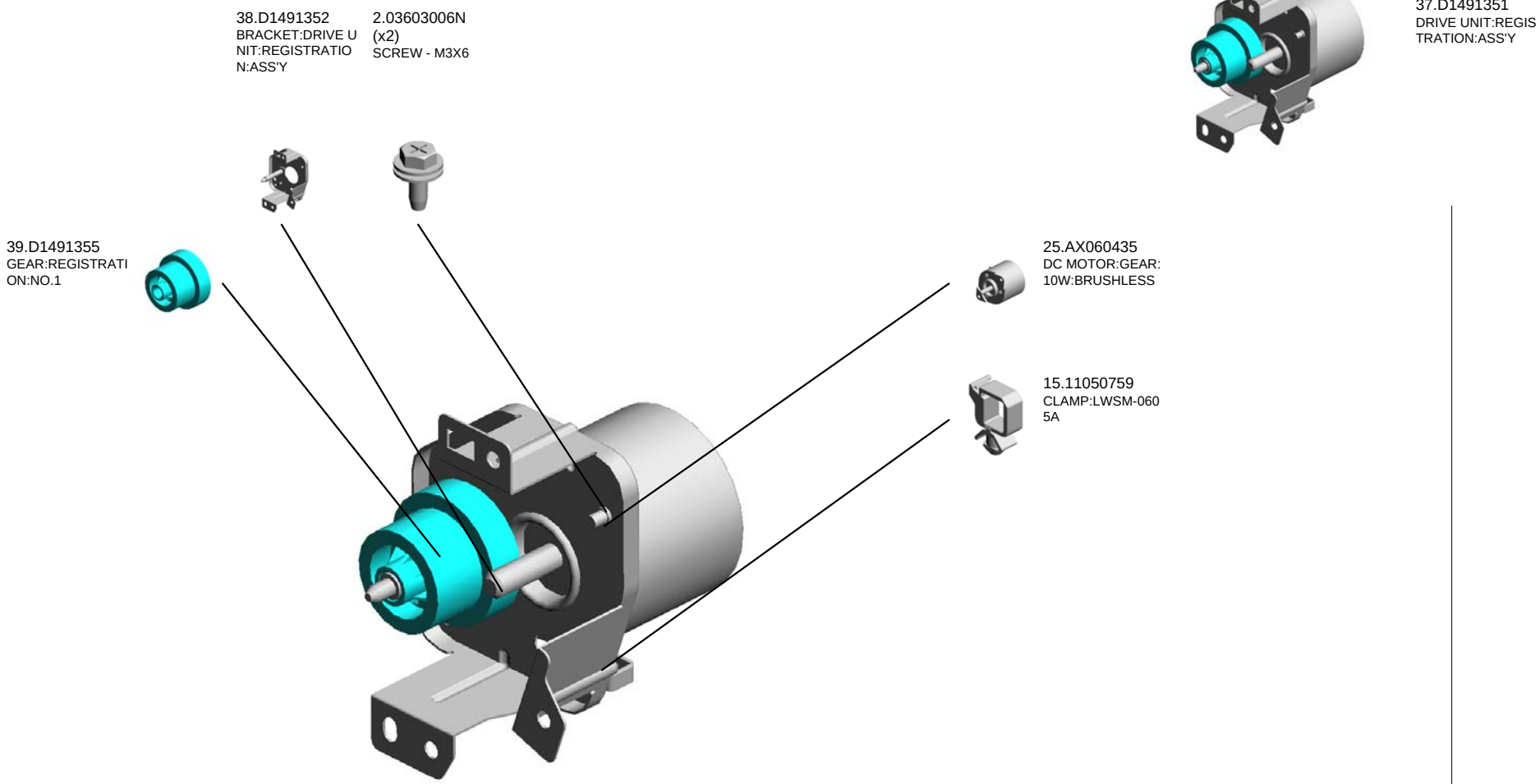

Copyright (c) 2006-2016 Ricoh Company, Ltd. 2016/07/29 Version 1.00

U014_S002
DRIVE UNIT:PAPER FEED:ASS'Y

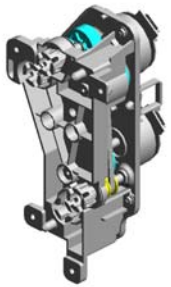

56.D2411399
DRIVE UNIT:PAPER FEED:ASS'Y

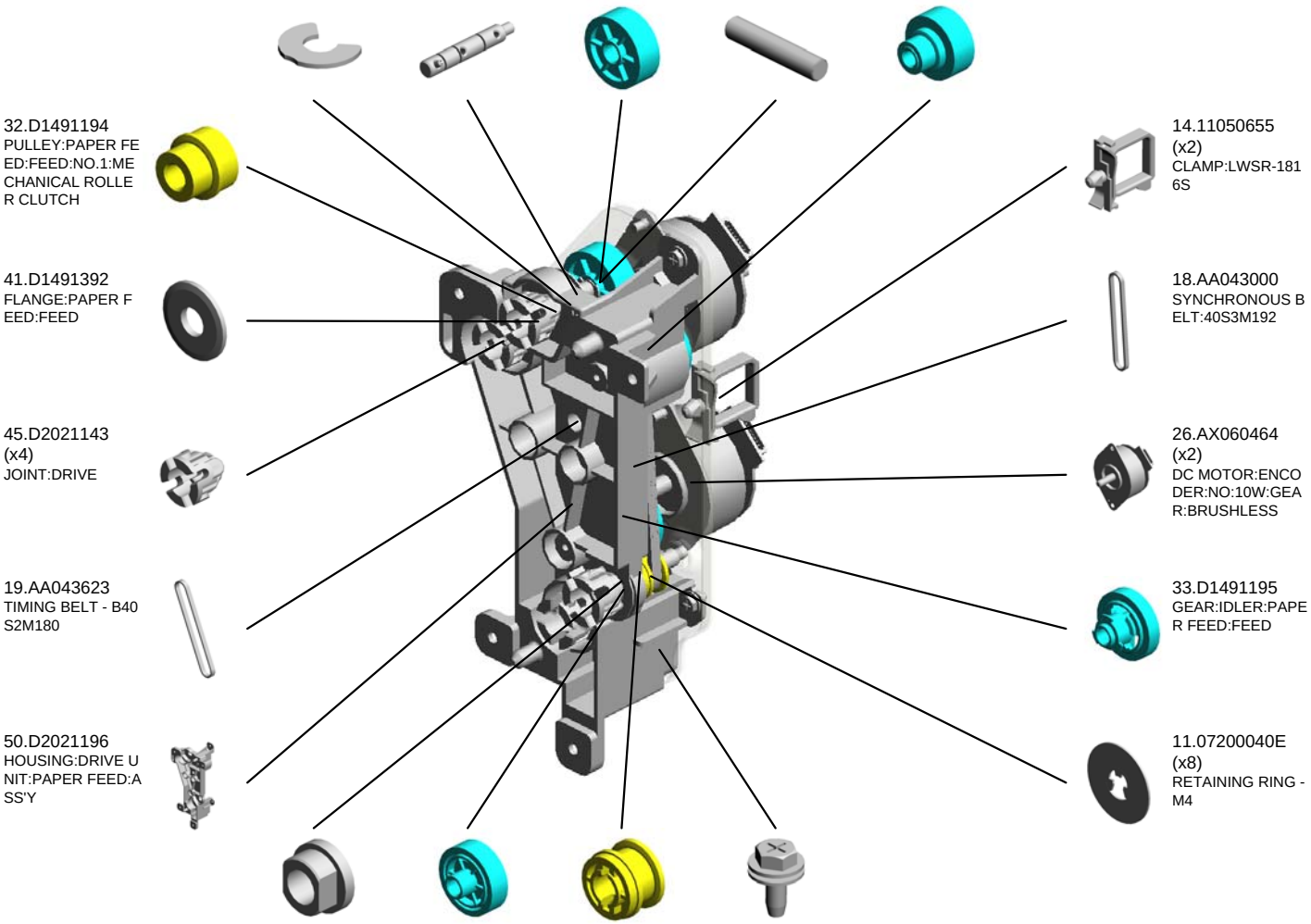

Copyright (c) 2006-2016 Ricoh Company, Ltd. 2016/07/29 Version 1.00

U014_S002_S001
BRACKET:DRIVE UNIT:PAPER FEED:ASS'Y

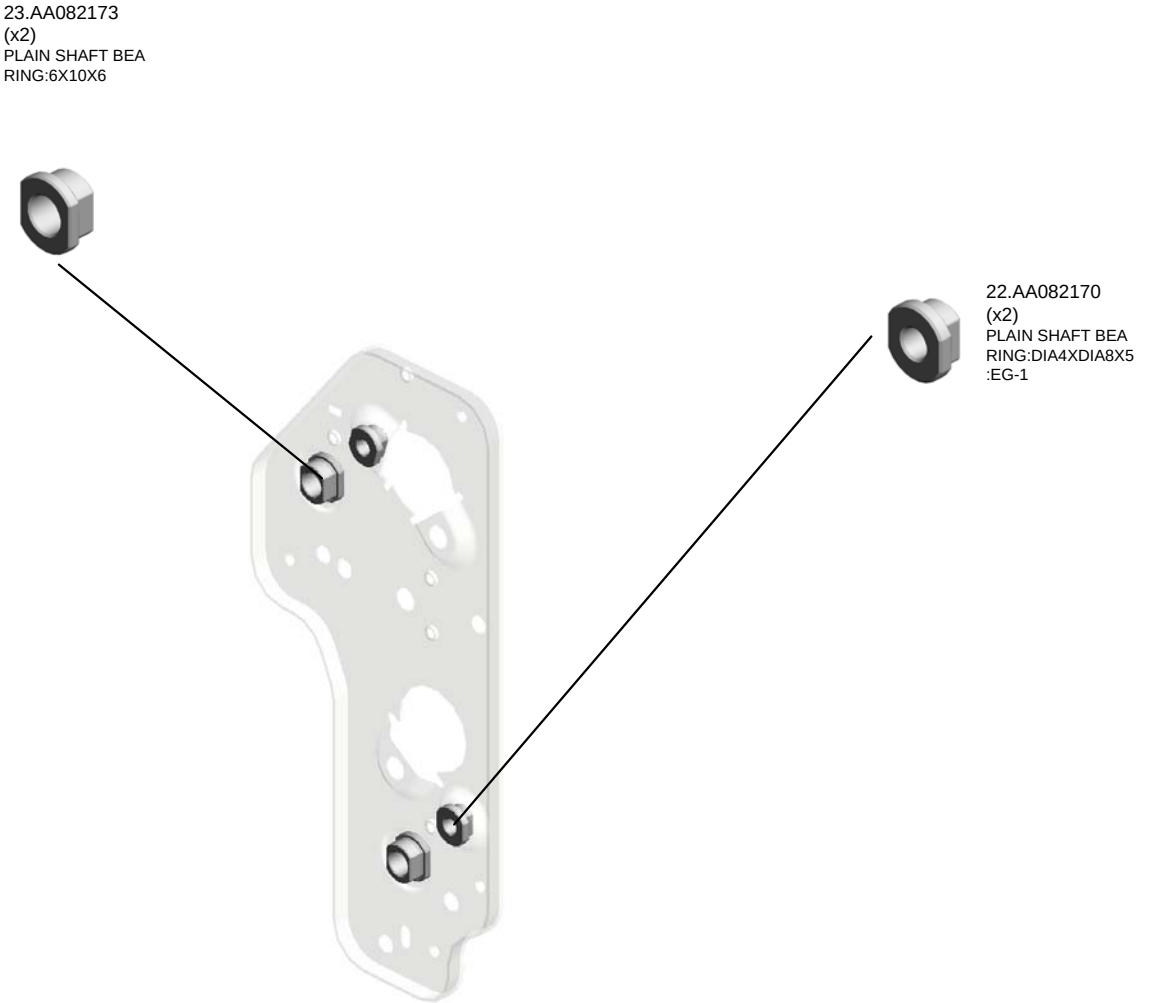

46.D2021152
BRACKET:DRIVE U
NIT:PAPER FEED:A
SS'Y

Copyright (c) 2006-2016 Ricoh Company, Ltd. 2016/07/29 Version 1.00

U014_S003
DRIVE UNIT:FUSING/PAPER EXIT UNIT:ASS'Y

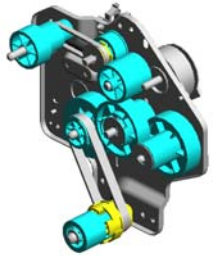

53.D2411357
DRIVE UNIT:FUSING/PAPER EXIT UNIT:ASS'Y

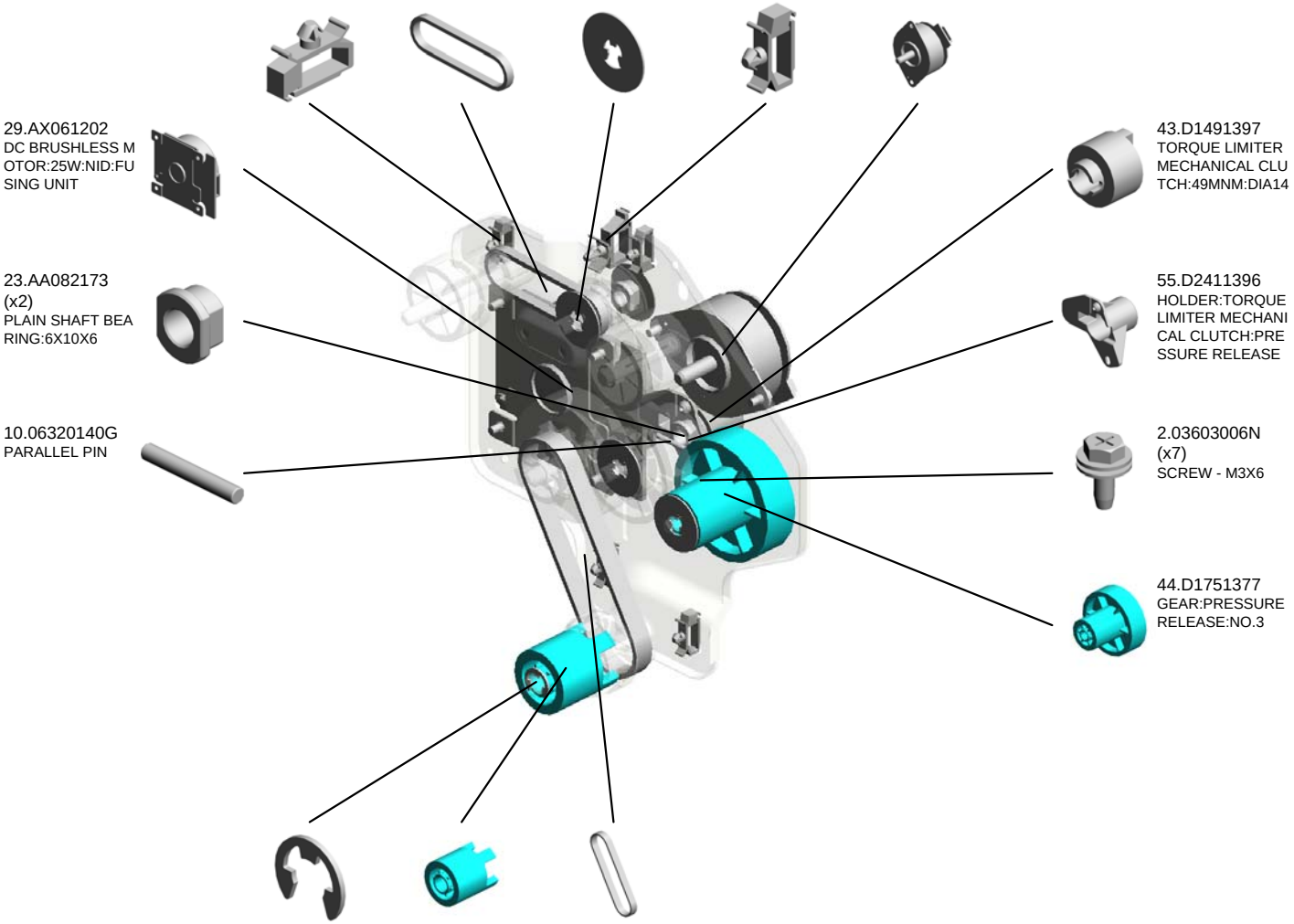

Copyright (c) 2006-2016 Ricoh Company, Ltd. 2016/07/29 Version 1.00

U014_S004
DRIVE UNIT:ENGINE:ASS'Y

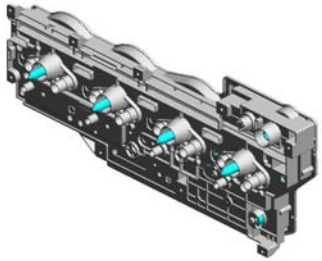

57.D2441117
DRIVE UNIT:ENGINE:ASS'Y

7.04583010N
(x25)
HEXAGON HEAD TAPPING SCREW:3X10

8.06220080E
SPRING PIN - 2X8 MM

2.03603006N
(x3)
SCREW - M3X6

11.07200040E
(x6)
RETAINING RING - M4

21.AA080346
BUSHING:FLANGE TYPE:DIA6

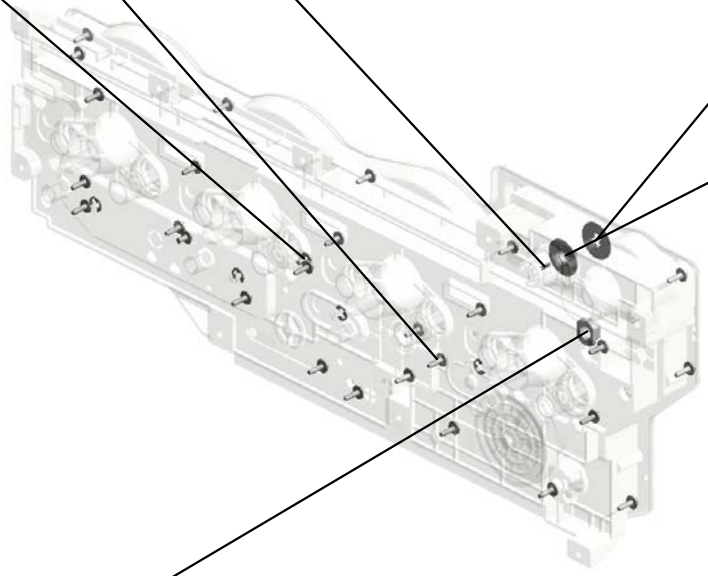

24.AA082175
PLAIN SHAFT BEARING:8X12X7

Copyright (c) 2006-2016 Ricoh Company, Ltd. 2016/07/29 Version 1.00

U015.ELECTRICAL

U015 S001
D1889360
POWER PACK:CB:ASS'Y

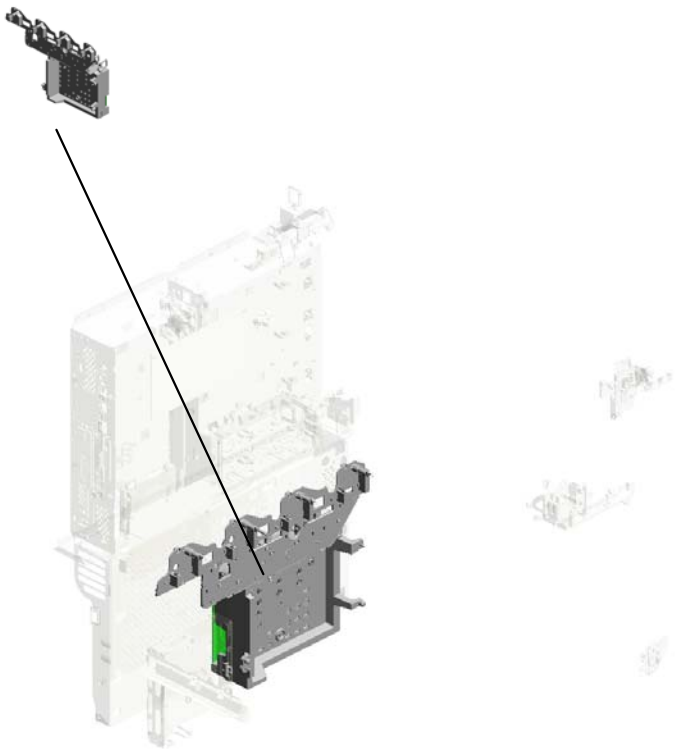

Copyright (c) 2006-2016 Ricoh Company, Ltd. 2016/07/29 Version 1.00

U015
ELECTRICAL

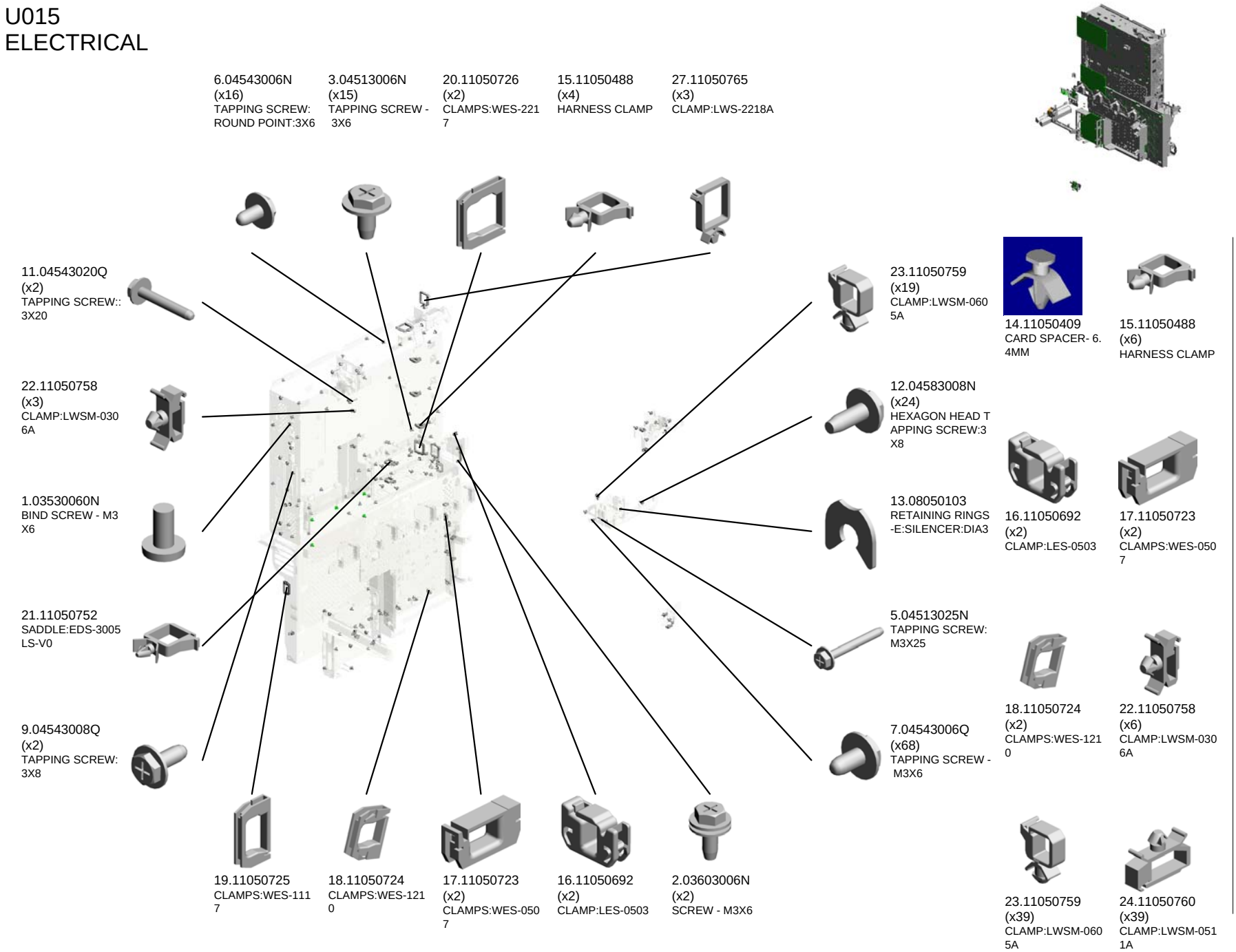

Copyright (c) 2006-2016 Ricoh Company, Ltd. 2016/07/29 Version 1.00

U015
ELECTRICAL

34.AA143848
(x4)
STEPPED SCREW - M3

36.AX640236
FAN:MM60X15

39.AZ320215
POWER PACK:TTS:L

29.14078389
EEPROM:BR24T128-W

30.16072525
FERRITE CORE:K3 FF 35.00X14.60X7.70X1.40

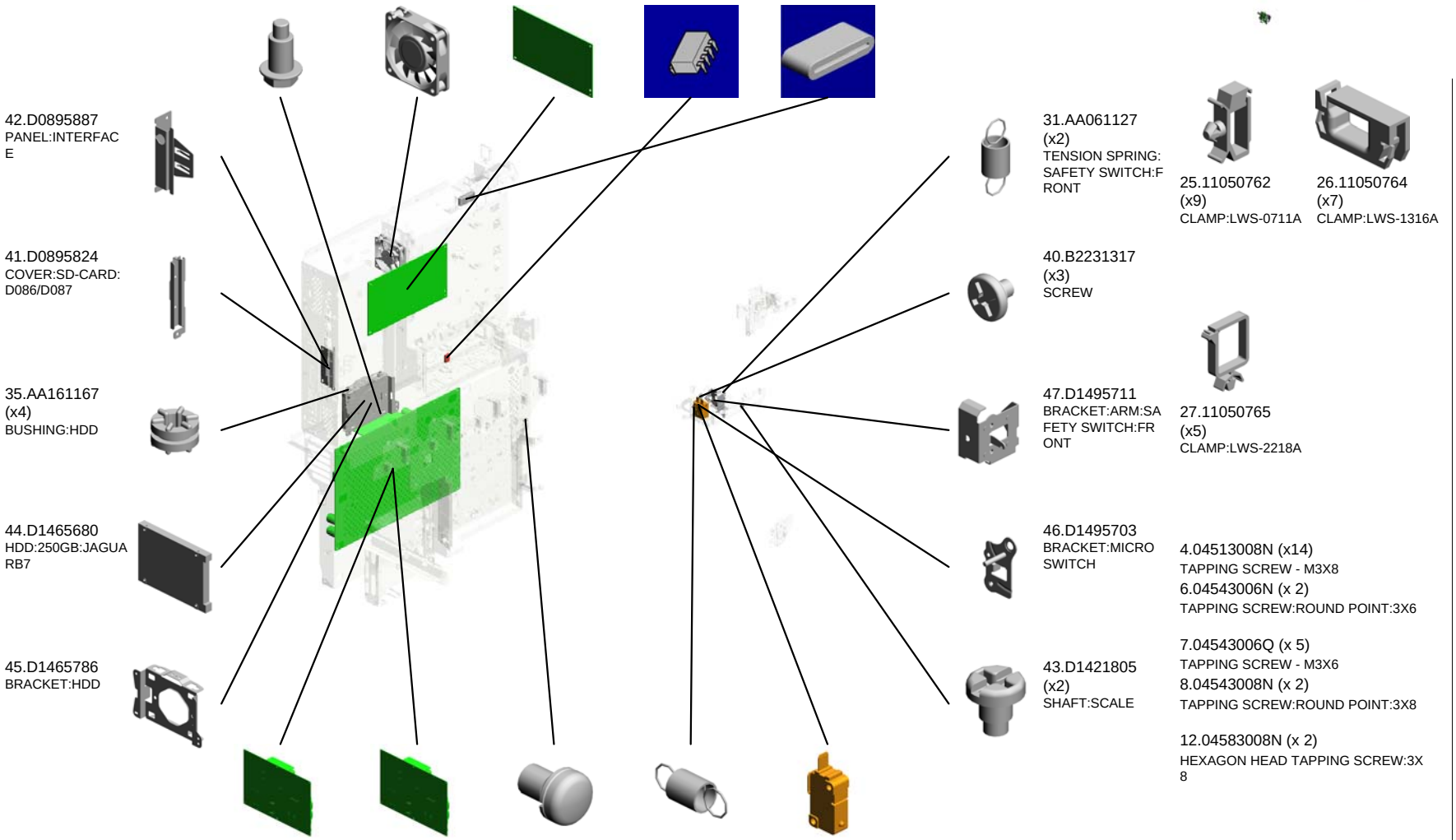

4.04513008N (x14)
TAPPING SCREW - M3X8
6.04543006N (x 2)
TAPPING SCREW:ROUND POINT:3X6

7.04543006Q (x 5)
TAPPING SCREW - M3X6
8.04543008N (x 2)
TAPPING SCREW:ROUND POINT:3X8

12.04583008N (x 2)
HEXAGON HEAD TAPPING SCREW:3X8

Copyright (c) 2006-2016 Ricoh Company, Ltd. 2016/07/29 Version 1.00

U015
ELECTRICAL

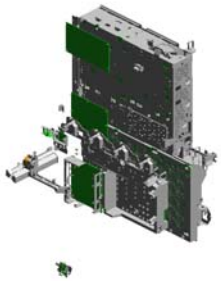

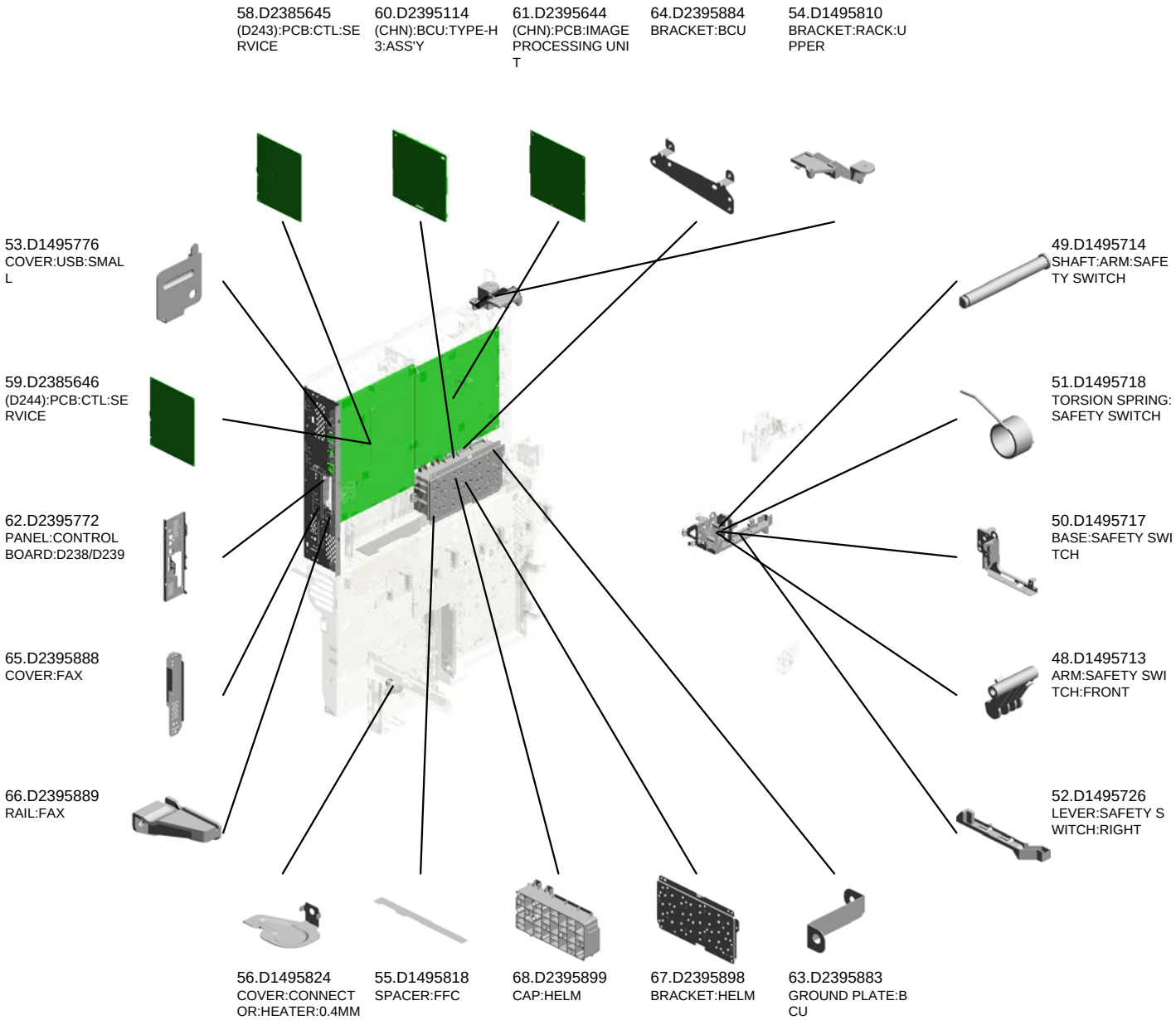

Copyright (c) 2006-2016 Ricoh Company, Ltd. 2016/07/29 Version 1.00

U015
ELECTRICAL

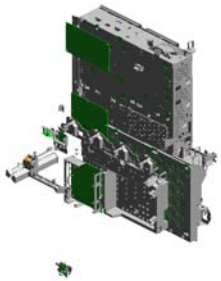

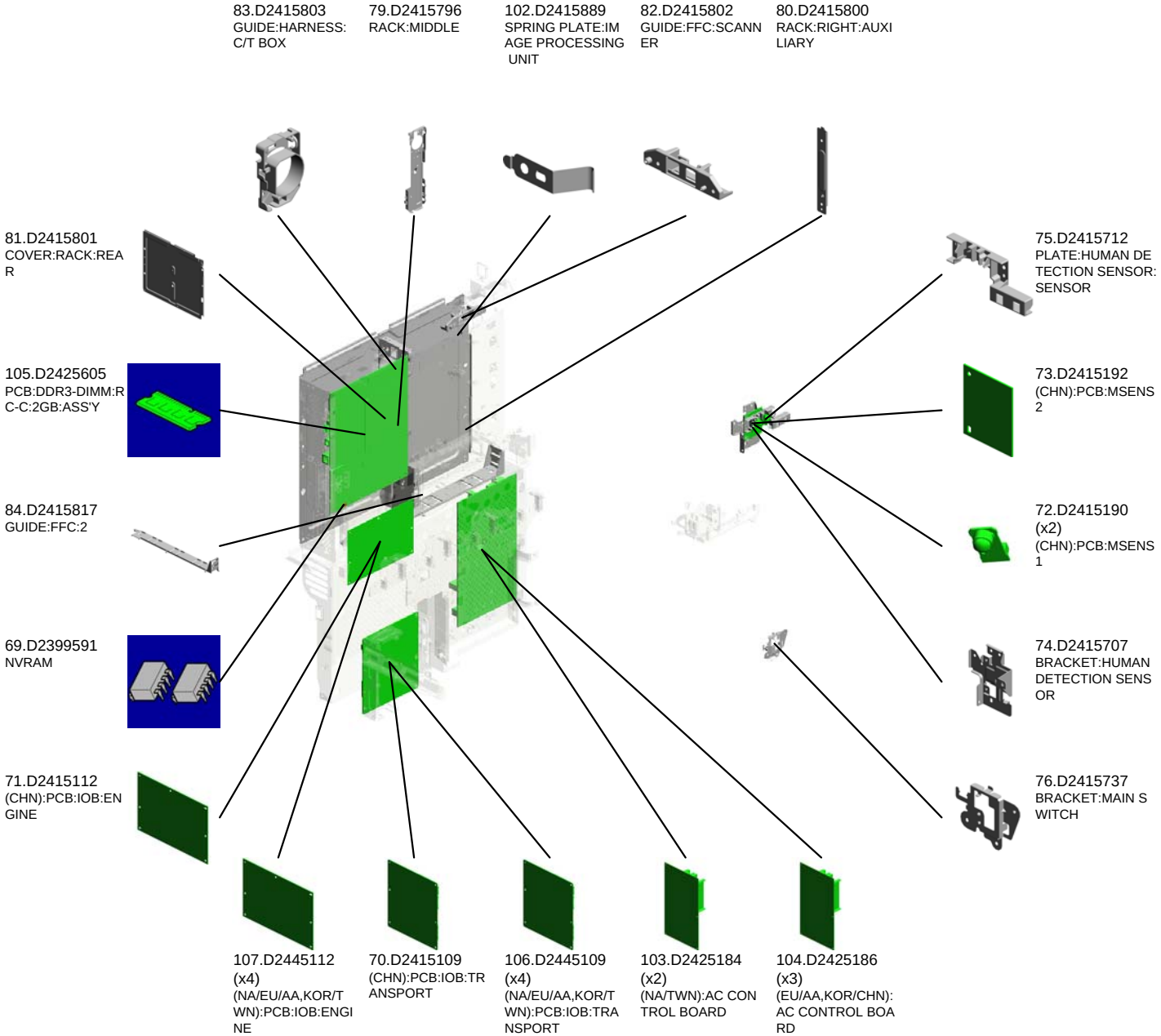

Copyright (c) 2006-2016 Ricoh Company, Ltd. 2016/07/29 Version 1.00

U015
ELECTRICAL

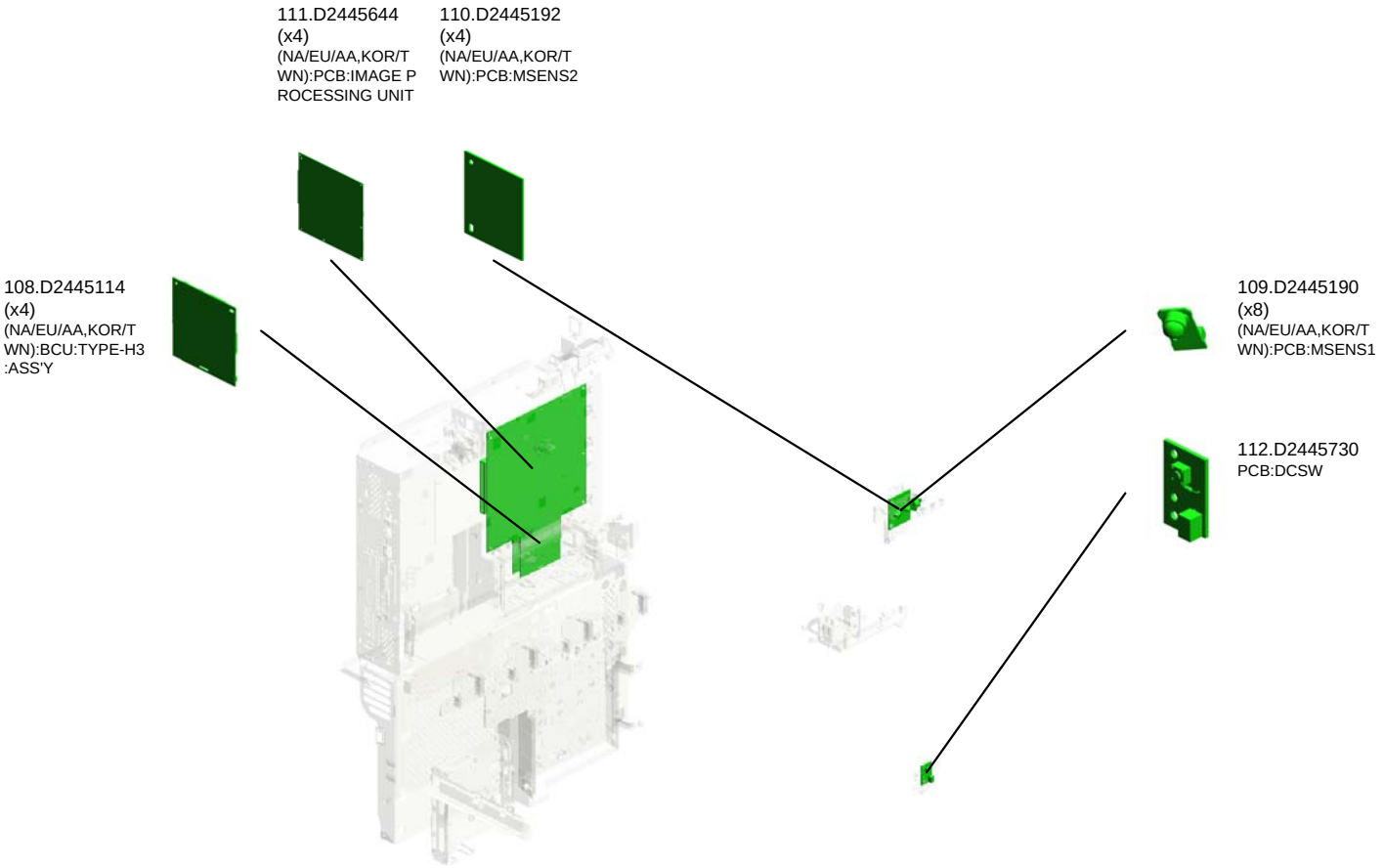

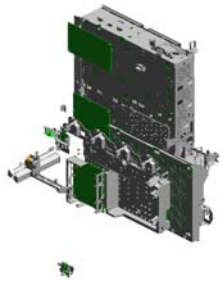

Copyright (c) 2006-2016 Ricoh Company, Ltd. 2016/07/29 Version 1.00

U015_S001
POWER PACK:CB:ASS'Y

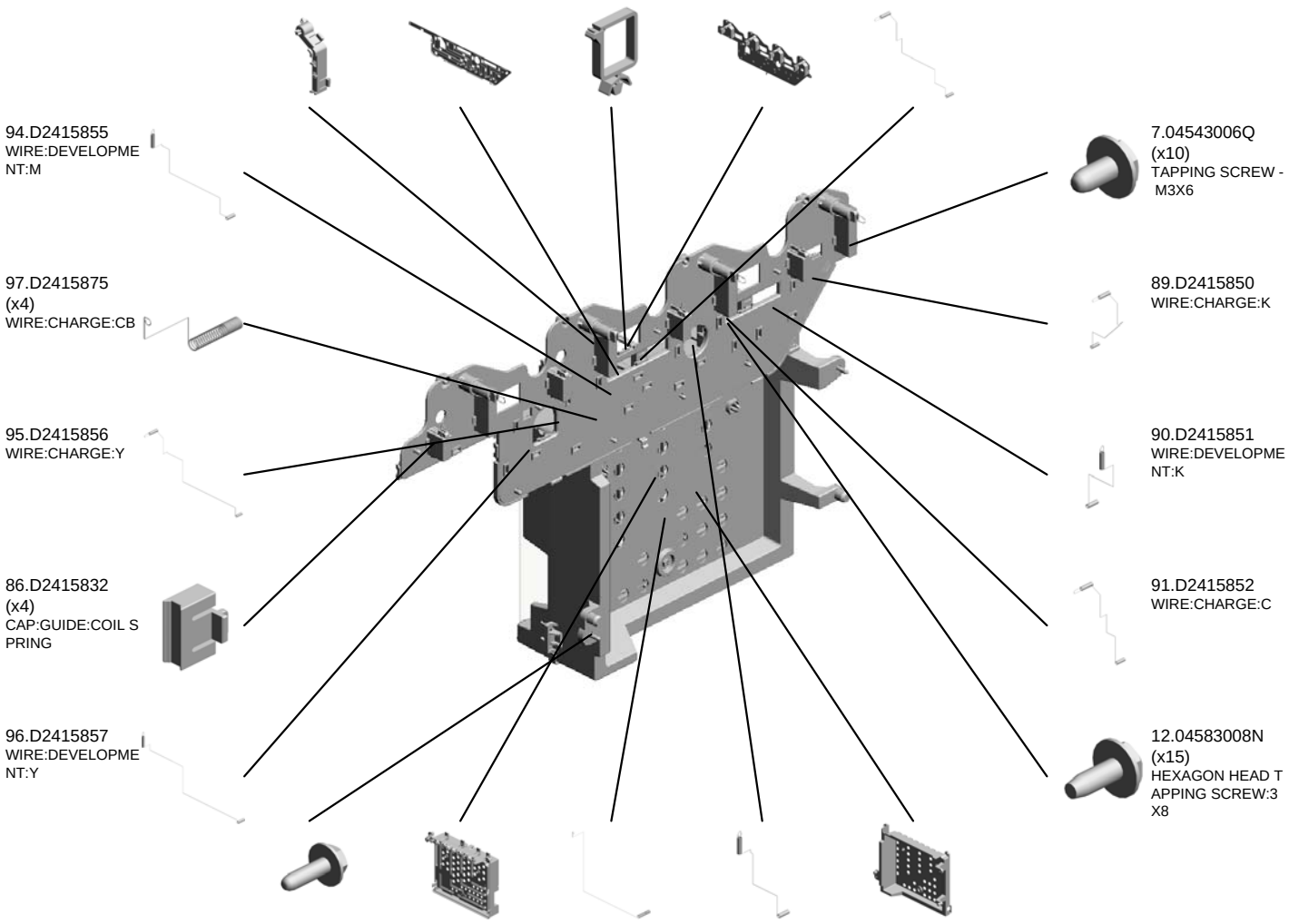

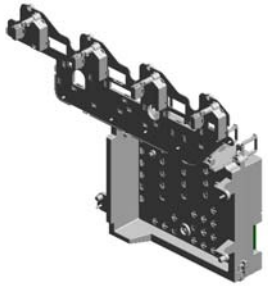

57.D1889360
POWER PACK:CB:ASS'Y

7.04543006Q (x 3)
TAPPING SCREW - M3X6

Copyright (c) 2006-2016 Ricoh Company, Ltd. 2016/07/29 Version 1.00

U015_S001
POWER PACK:CB:ASS'Y

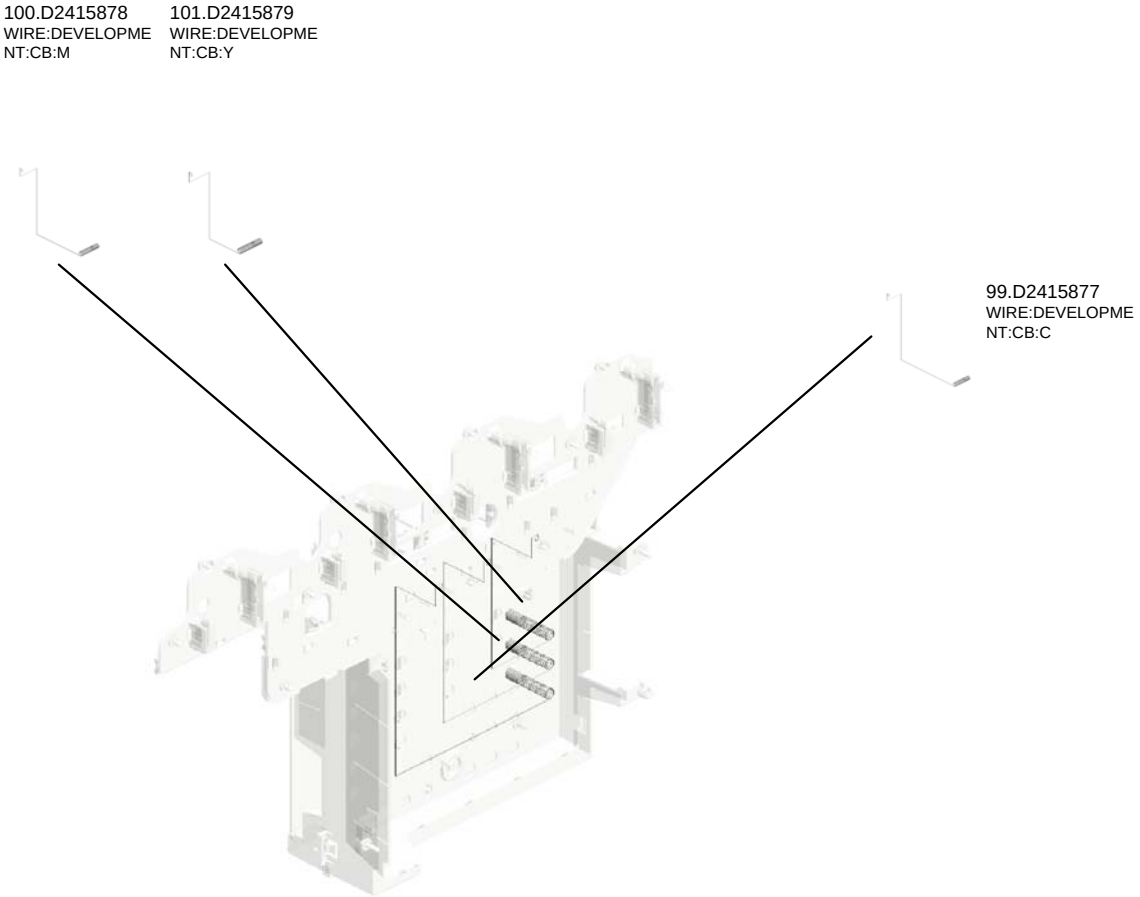

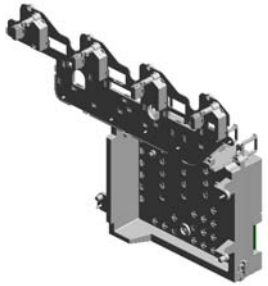

57.D1889360
POWER PACK:CB:
ASS'Y

Copyright (c) 2006-2016 Ricoh Company, Ltd. 2016/07/29 Version 1.00

U016.MAIN FRAME

U016 S001
D1497935
CASE:FILTER:ASS'Y

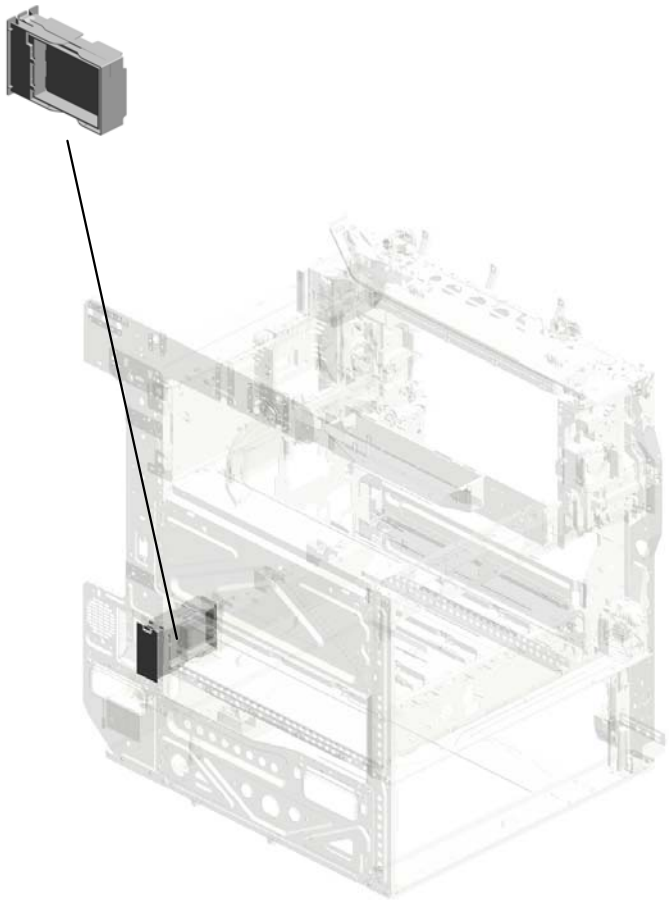

Copyright (c) 2006-2016 Ricoh Company, Ltd. 2016/07/29 Version 1.00

U016
MAIN FRAME

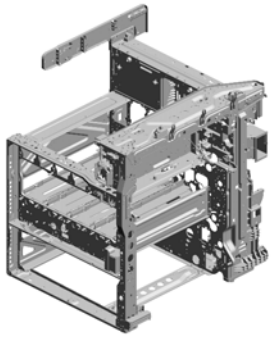

21.D1477951
DUCT:SUPPLY:A

22.D1477952
DUCT:SUPPLY:B

13.AX640199
(x2)
FAN:MM80:25MM:DC 2.16W

19.D1175303
THERMISTOR

12.AA080346
(x2)
BUSHING:FLANGE TYPE:DIA6

5.04543006Q
(x230)
TAPPING SCREW - M3X6

9.08025299
TAPPING SCREW - M3X8

16.AX660015
DC FAN MOTOR:SIROCCO:DC24V:PWM

10.08025328
(x2)
HEXAGON HEAD TAPPING SCREW:3X40

14.AX640219
(x2)
DC FAN MOTOR:DC24V:MM60:25MM

1.04503025N
(x2)
TAPPING SCREW: 3X25

11.11050764
CLAMP:LWS-1316A

15.AX640236
FAN:MM60X15

8.04583008N (x 1)
HEXAGON HEAD TAPPING SCREW:3X8

8.04583008N
(x56)
HEXAGON HEAD TAPPING SCREW:3X8

7.04543008Q
(x18)
TAPPING SCREW: 3X8

2.04503035N
(x2)
TAPPING SCREW: 3X35

18.B2381089
COVER - POSITIONING PIN

17.B2381088
COVER - CONNECTOR

4.04533008N
BINDING SELF TAPPING SCREW:3X8

6.04543008N
TAPPING SCREW: ROUND POINT:3X8

3.04513006N
(x6)
TAPPING SCREW - 3X6

Copyright (c) 2006-2016 Ricoh Company, Ltd. 2016/07/29 Version 1.00

U016
MAIN FRAME

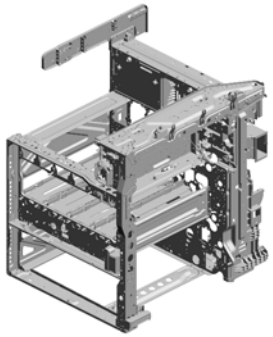

35.D1497955
DUCT:SUPPLY:FAN:UPPER

41.D2417941
DUCT:EXHAUST:UPPER:A

42.D2417942
DUCT:EXHAUST:UPPER:B

40.D1501095
(x2)
BRACKET:POSITIONING:FUSING UNIT:M3

43.D2417943
DUCT:EXHAUST:UPPER:C

36.D1497956
DUCT:SUPPLY:FAN:LOWER

39.D1497986
GUIDE:THERMISTOR

23.D1477956
DUCT:EXHAUST:DRIVE:A

24.D1477957
DUCT:EXHAUST:DRIVE:B

29.D1497931
DUCT:DEVELOPMENT:EXHAUST

44.D2417944
DUCT:EXHAUST:UPPER:D

34.D1497954
DUCT:SUPPLY:D

33.D1497953
DUCT:SUPPLY:C

28.D1497923
DUCT:DEVELOPMENT:RIGHT LOWER

27.D1497922
COVER:FAN:DEVELOPMENT:RIGHT LOWER

38.D1497983
BRACKET:FAN:POWER SUPPLY UNIT

37.D1497982
DUCT:POWER SUPPLY UNIT

30.D1497932
DUCT:PCU:EXHAUST

25.D1491099
(x2)
COVER:GRIP:LEFT

26.D1491338
GUIDE PLATE:PAPER FEED TABLE:FRONT

Copyright (c) 2006-2016 Ricoh Company, Ltd. 2016/07/29 Version 1.00

U016
MAIN FRAME

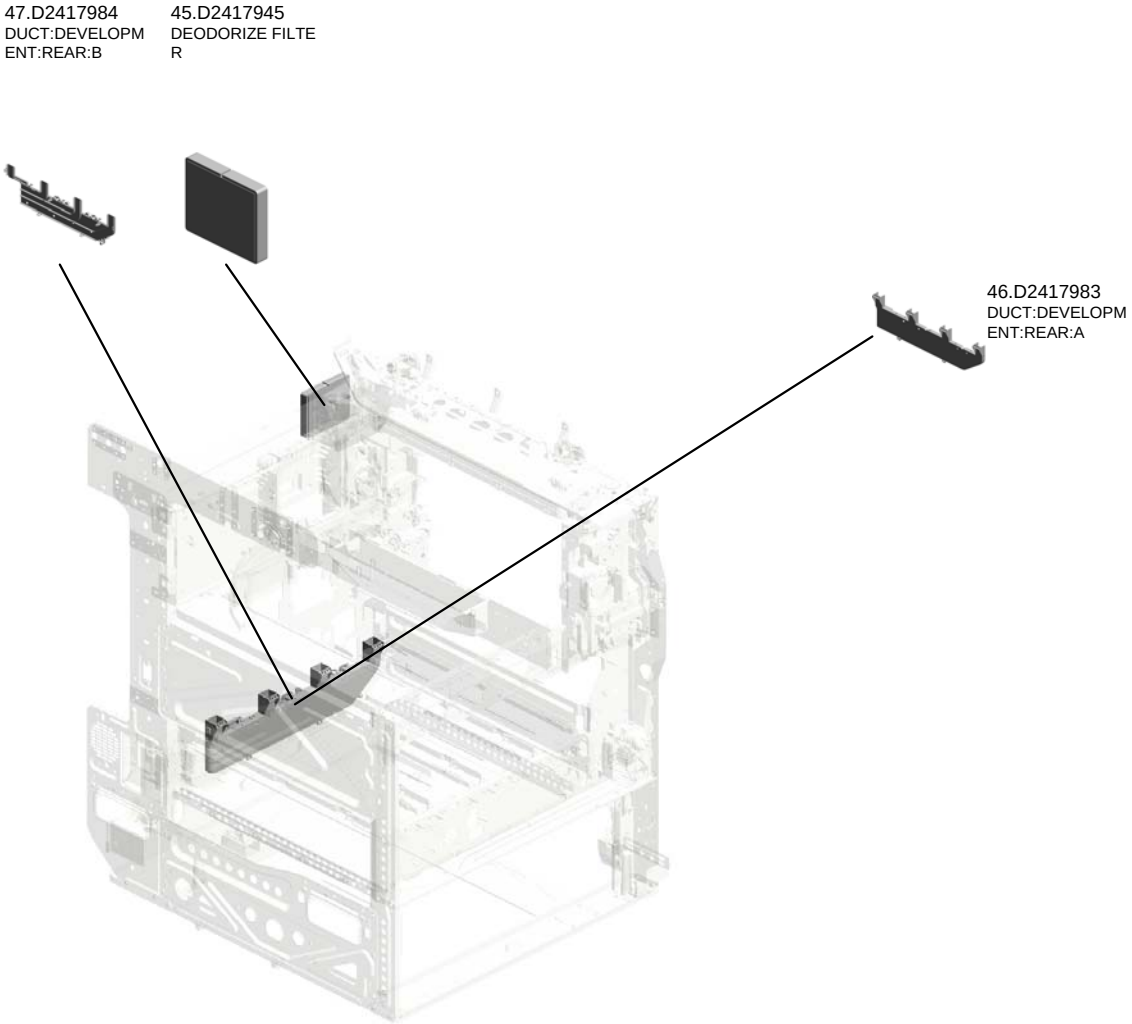

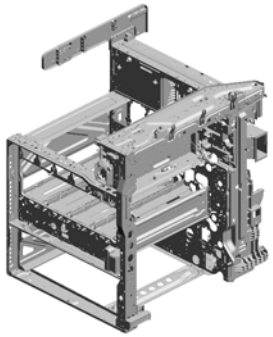

Copyright (c) 2006-2016 Ricoh Company, Ltd. 2016/07/29 Version 1.00

U016_S001
CASE:FILTER:ASS'Y

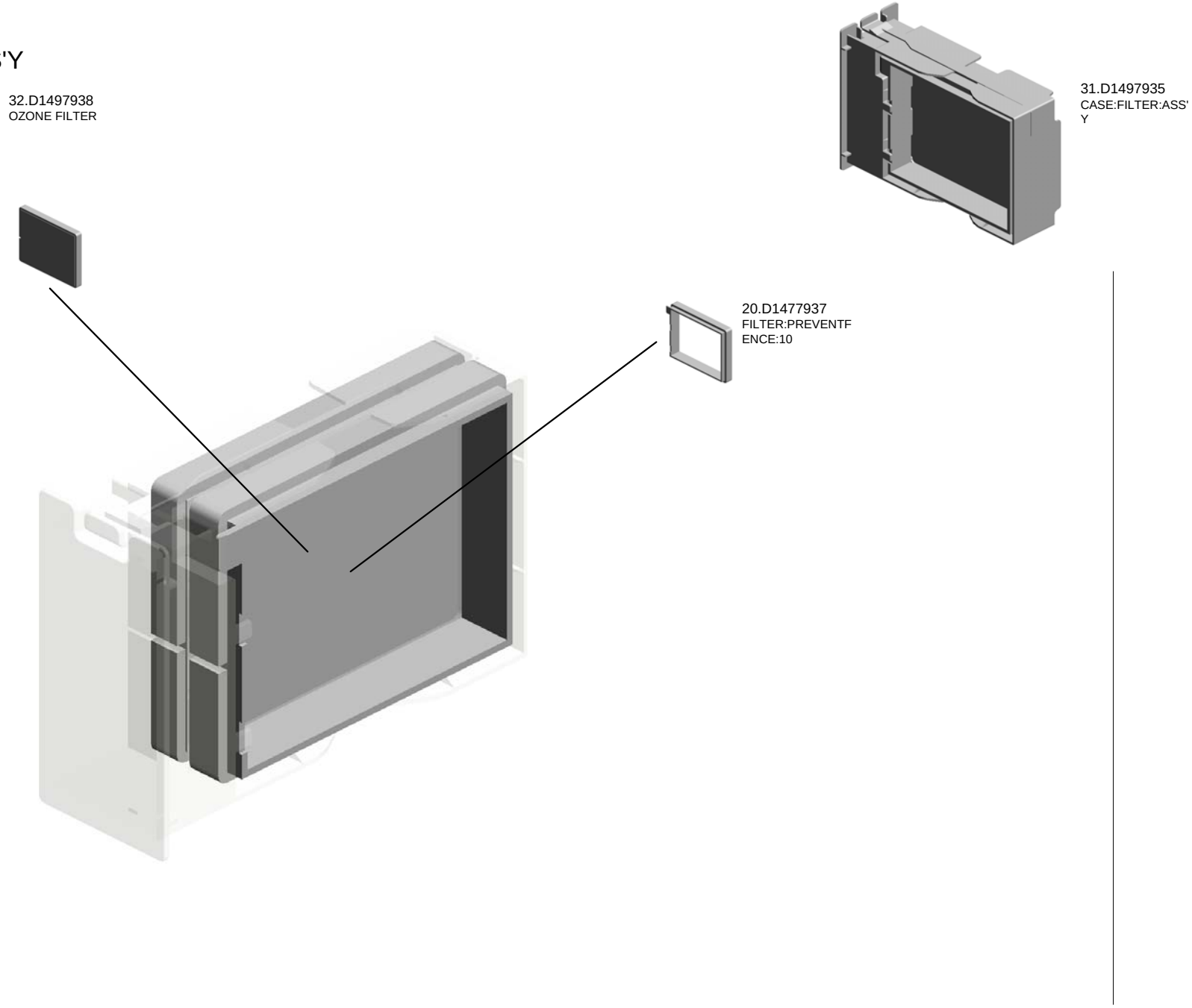

Copyright (c) 2006-2016 Ricoh Company, Ltd. 2016/07/29 Version 1.00

ACCESSORIES

1.04583008N
(x2)
HEXAGON HEAD TAPPING SCREW:3 X8

2.08050103
RETAINING RINGS-E:SILENCER:DIA 3

3.11500440
(NA):POWER SUPPLY CODE:120V:15 A

4.11500441
(x2)
(EU/AA,KOR):POWER SUPPLY CODE :250V:10A

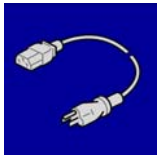

5.11500442
(CHN):POWER SUPPLY CODE:250V: 10A

6.11500443
(TWN):POWER SUPPLY CODE:125V: 15A

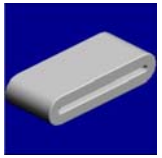

7.16072470
(CHN):FERRITE CORE:GRFC-10

8.AA001564
(NA/EU/AA,KOR/TWN/CHN(D24321)(D24421)):PLATE:LOGOTYPE:RIC

9.AA001565
(AA,KOR):PLATE:LOGOTYPE:LAN

10.AA001567
(x2)
(AA,KOR/CHN(D24322)(D24422)):PLA TE:LOGOTYPE:GES

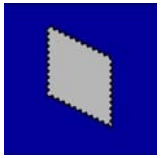

11.B0651374
CLOTH - DF EXPOSURE GLASS

12.D1201556
(AA,KOR):SHEET:LOGO:LAN

13.D1201557
(x2)
(AA,KOR/CHN(D24322)(D24422)):SHE ET:LOGO:GES

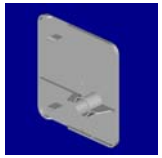

14.D1491264
CAP:ROCKER SWITCH

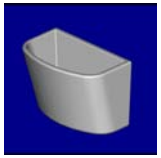

15.D1491317
HOLDER:GLASS:CLEANER:ASS'Y

16.D1491321
(x4)
(NA/EU/AA,KOR/TWN):DECAL:TONE R BOTTLE:BK

17.D1491322
(x4)
(NA/EU/AA,KOR/TWN):DECAL:TONE R BOTTLE:C

18.D1491323
(x4)
(NA/EU/AA,KOR/TWN):DECAL:TONE R BOTTLE:M

19.D1491324
(x4)
(NA/EU/AA,KOR/TWN):DECAL:TONE R BOTTLE:Y

20.D1491553
(NA/EU/AA,KOR/TWN/CHN(D24321)(D24421)):SHEET:LOGO

21.D1494390
(x2)
(NA/AA,KOR):DECAL:CAUTION:INKJ ET

22.D1496667
(CHN):DECAL:CAUTION:INKJET

23.D1496668
(TWN):DECAL:CAUTION:INKJET

24.D1496766
(x3)
(NA/EU/AA,KOR):DECAL:CAUTION:O RIGINAL

Copyright (c) 2006-2016 Ricoh Company, Ltd. 2016/07/29 Version 1.00

ACCESSORIES

25.D1496767
(CHN):DECAL:CAUTION:ORIGINAL

26.D1496768
(TWN):DECAL:CAUTION:ORIGINAL

27.D1496851
(x2)
(NA/AA,KOR):DECAL:MAIN SWITCH:ON-STANDBY

28.D1496852
(x3)
(EU/TWN/CHN):DECAL:MAIN SWITCH:ON-STANDBY

29.D1496862
DECAL:SIZE INDICATION:PAPER TRAY

30.D1961485
(x4)
(NA/EU/AA,KOR/TWN):IC:NFC_TAG:MN63Y3212NB

31.D2231381
(x3)
(NA(17)/EU/TWN):DECAL:EXPOSURE GLASS:CLEANING

32.D2411788
(x2)
CAP:COVER:POSITIONING

33.D2414472
END FENCE:TRAY:EXIT:ASS'Y

34.D2414953
(x4)
(NA/EU/AA,KOR/TWN):ROLLER:EXIT:PRESSURE:1TYPE:ASS'Y

35.D2414968
(x4)
(NA/EU/AA,KOR/TWN):ROLLER:EXIT:PRESSURE:1TYPE:MIDDLE

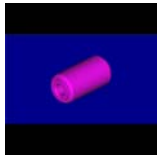

36.D2414973
(x4)
(NA/EU/AA,KOR/TWN):ROLLER:EXIT:PRESSURE:1TYPE:BOTH ENDS

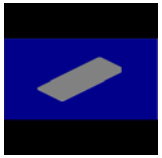

37.D2414987
(x4)
(NA/EU/AA,KOR/TWN):GUIDE:EXIT:AUXILIARY:MIDDLE

38.D2414988
(x4)
(NA/EU/AA,KOR/TWN):GUIDE:EXIT:AUXILIARY:BOTH ENDS

39.D2414990
(x4)
(NA/EU/AA,KOR/TWN):GUIDE PLATE:EXIT:AUXILIARY

40.D2416335
COVER:INTERMEDIATE TRANSFER

41.D2436752
(x4)
(D243:NA/EU/AA,KOR/TWN):DECAL:MODEL NAME PLATE:RIC

42.D2446752
(x4)
(D244:NA/EU/AA,KOR/TWN):DECAL:MODEL NAME PLATE:RIC

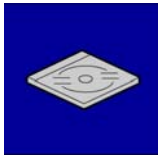

43.D2447851
(NA):CD-ROM:DRV:ASS'Y

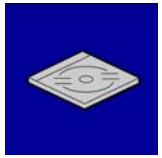

44.D2447852
(EU):CD-ROM:DRV:ASS'Y

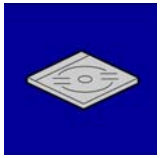

45.D2447853
(AA,KOR):CD-ROM:DRV:ASS'Y

46.D2557798
(x4)
(NA/EU/AA/KOR/TWN):DECAL:BLUETOOTH

47.D2621652
(CHN):DECAL

48.D3B06303
(EU):DECAL:CAUTION:ORIGINAL:MANY LANGUAGES

Copyright (c) 2006-2016 Ricoh Company, Ltd. 2016/07/29 Version 1.00

ACCESSORIES

49.D6836031
(EU):DECAL:SET:ORIGINAL TABLE

50.D6846031
(x3)
(NA/EU/TWN):DECAL:ORIGINAL TABLE

51.D6846061
(x3)
(NA/EU/TWN):DECAL::ORIGINAL:MANY LANGUAGES

52.GA003268
DECAL:PDF:I-GRAY:ABS

Imageable Area Extension Unit Type M19

1.D3BR6211
TRANSFER ROLLER:SECOND:DIA19.5:OPTION:ASS'Y

SPECIAL TOOLS

1.52039502
Silicon Grease G-501

2.A0929503
C4 Color Test Chart (3 pcs/set)

3.A1849501
Scanner Positioning Pin (2pcs/set)

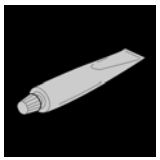

4.A2579300
Grease Barrierta S552R

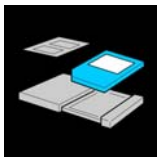

5.B6455020
SD Card (1GB)

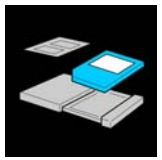

6.B6455060
SD Card (16GB)

7.C4019503
20X Magnification Scope

8.VSSG9002
FLUOTRIBO MG GREASE: 100G

Copyright (c) 2006-2016 Ricoh Company, Ltd. 2016/07/29 Version 1.00

HEATER:SCANNER:ASS'Y

1.D2380071
(x2)
(NA/TWN):HEATER:SCANNER:120V:ASS'Y

2.D2380072
(x3)
(EU/AA,KOR/CHN):HEATER:SCANNER:220/240V:ASS'Y

HEATER:SCANNER:ASS'Y:SUB PARTS

1.03530030N
(x10)
SCREW:M3X3

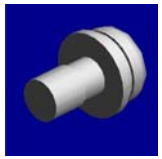

2.09544008N
(x5)
SCREW - M4X8

3.D2411775
(x5)
COVER:HEATER:SCANNER

4.D2411776
(x5)
BRACKET:HEATER:SCANNER

KIT:HEATER:PHOTOCONDUCTOR

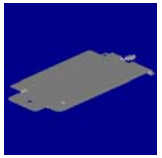

1.D7390116
(x2)
(NA/TWN):HEATER:PHOTOCONDUCTOR:ASS'Y

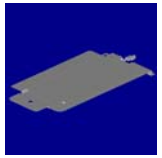

2.D7390117
(x3)
(EU/AA,KOR/CHN):HEATER:PHOTOCONDUCTOR:ASS'Y

Copyright (c) 2006-2016 Ricoh Company, Ltd. 2016/07/29 Version 1.00

KIT:HEATER:PHOTOCONDUCTOR:SUB PARTS

1.08025299
(x5)
TAPPING SCREW - M3X8

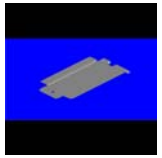

2.D7392269
(x5)
COVER:HEATER:PHOTOCONDUCTOR

3.D7396801
(x5)
DECAL:H-TEMP WARNING:HEATER:OPTION

HEATER:SCANNER:PHOTOCONDUCTOR:ELECTRICAL COMPONENTS SECTION:ASS'Y

1.D2386650
(x5)
HEATER:SCANNER:ELECTRICAL COMPONENTS SECTION:ASS'Y

HEATER:SCANNER:PHOTOCONDUCTOR:ELECTRICAL COMPONENTS SECTION:ASS'Y:SUB PARTS

1.04543006Q
(x15)
TAPPING SCREW - M3X6

2.11050759
(x30)
CLAMP:LWSM-0605A

3.D2025185
(x5)
PCB:DHB

Copyright (c) 2006-2016 Ricoh Company, Ltd. 2016/07/29 Version 1.00

HEATER:PAPER TRAY:ASS'Y

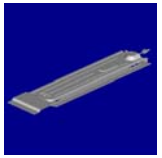

1.D2386630
(x2)
(NA/TWN):HEATER:PAPER TRAY:120V:ASS'Y

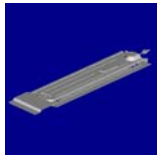

2.D2386640
(x3)
(EU/AA,KOR/CHN):HEATER:PAPER TRAY:220/240V:ASS'Y

HEATER:PAPER TRAY:ASS'Y:SUB PARTS

1.08025299
(x10)
TAPPING SCREW - M3X8

2.11050760
(x10)
CLAMP:LWSM-0511A

3.D1492898
(x5)
COVER:HEATER:PAPER TRAY

4.D1492899
(x5)
HEAT SINK:HEATER

5.M0262734
(x5)
DECAL:H-TEMP WARNING:HEATER

HEATER:PAPER TRAY:ELECTRICAL COMPONENTS SECTION:ASS'Y

1.D2386661
(x2)
(NA/TWN):HEATER:PAPER TRAY:ELECTRICAL COMPONENTS SECTION:ASS'Y

2.D2386662
(x3)
(EU/AA,KOR/CHN):HEATER:PAPER TRAY:ELECTRICAL COMPONENTS SECTION:ASS'Y

Copyright (c) 2006-2016 Ricoh Company, Ltd. 2016/07/29 Version 1.00

HEATER:PAPER TRAY:ELECTRICAL COMPONENTS SECTION:ASS'Y:SUB PARTS

1.04543006Q
(x15)
TAPPING SCREW - M3X6

2.D2025185
(x5)
PCB:DHB

Copyright (c) 2006-2016 Ricoh Company, Ltd. 2016/07/29 Version 1.00

Number	Part Name	Group	ID
52039502	Silicon Grease G-501	SPECIAL TOOLS	1
52062686	SNAP RING	U001	5
		U005_S004_S001	13
		U005_S005_S001	13
52152621	SNAP RING - M6	U010	7
		U013	18
54472681	SNAP RING	U010	8
		U013	19
A0929503	C4 Color Test Chart (3 pcs/set)	SPECIAL TOOLS	2
A1849501	Scanner Positioning Pin (2pcs/set)	SPECIAL TOOLS	3
A2324666	CUSHION - STEPPER MOTOR	U012	12
A2501752	EXPOSURE GLASS	U003	17
A2579300	Grease Barrierta S552R	SPECIAL TOOLS	4
AA001564	(NA/EU/AA,KOR/TWN/CHN(D24321)(D24421)):PLATE:LOGOTYPE:RIC	ACCESSORIES	8
AA001565	(AA,KOR):PLATE:LOGOTYPE:LAN	ACCESSORIES	9
AA001567	(AA,KOR/CHN(D24322)(D24422)):PLATE:LOGOTYPE:GES	ACCESSORIES	10
AA021031	MAGNETIC CATCH	U001	6
AA043000	SYNCHRONOUS BELT:40S3M192	U014_S002	18
AA043623	TIMING BELT - B40S2M180	U014_S002	19
AA043777	SYNCHRONOUS BELT:80S3M213	U014_S003	20
AA043980	TIMING BELT:30S2M300	U013_S001	20
AA061127	TENSION SPRING:SAFETY SWITCH:FRONT	U015	31
AA061128	TENSION SPRING:SAFETY SWITCH:RIGHT	U015	32
AA061208	TENSION SPRING:STRIPPER PLATE	U011_S001	17
		U011_S002	17
		U011_S003	17
		U011_S004	17
		U011_S005	17
AA061209	TENSION SPRING:GATE PAWL	U011_S001	18
		U011_S002	18
		U011_S003	18
		U011_S004	18
		U011_S005	18
AA061211	TENSION SPRING:HOLDER:FUSING EXIT	U011_S001	19
		U011_S002	19
		U011_S003	19
		U011_S004	19
		U011_S005	19
AA063732	COMPRESSION SPRING:PRESSURE ROLLER	U011_S001	20
		U011_S002	20
		U011_S003	20
		U011_S004	20
		U011_S005	20
AA063942	COMPRESSION SPRING:REGISTRATION:DRIVE	U010	9
AA063943	COMPRESSION SPRING:GUIDE PLATE:REGISTRATION:4N	U010	10
AA080252	BUSHING - M4	U012	13
AA080346	BUSHING:FLANGE TYPE:DIA6	U009_S001	9
		U010	11
		U014_S002	21
		U014_S004	21
		U016	12
AA080387	PLAIN SHAFT BEARING:EXIT ROLLER:FUSING EXIT:RIGHT:FRONT	U011_S001	21
		U011_S002	21
		U011_S003	21
		U011_S004	21
		U011_S005	21
AA080388	PLAIN SHAFT BEARING:EXIT ROLLER:FUSING EXIT:RIGHT:REAR	U011_S001	22
		U011_S002	22
		U011_S003	22
		U011_S004	22
		U011_S005	22
AA082101	BUSHING - 6X10X6	U008	10
		U008_S001	10
		U008_S002	10
		U008_S003	10
AA082144	BUSHING - 8X12X7	U010	12
AA082170	PLAIN SHAFT BEARING:DIA4XDIA8X5:EG-1	U012	14
		U013_S001	21
		U014_S002_S001	22
AA082171	PLAIN SHAFT BEARING:6X10X6	U013_S001	22

Copyright (c) 2006-2016 Ricoh Company, Ltd. 2016/07/29 Version 1.00

Number	Part Name	Group	ID
AA082173	PLAIN SHAFT BEARING:6X10X6	U005	14
		U005_S004	14
		U005_S004_S002	14
		U005_S005	14
		U005_S005_S002	14
		U012	15
		U013_S001	23
		U014_S002_S001	23
		U014_S003	23
AA082174	PLAIN SHAFT BEARING:6X10X9	U005_S004	15
		U005_S005	15
AA082175	PLAIN SHAFT BEARING:8X12X7	U005	16
		U014_S004	24
AA082187	BUSHING:DIA6XDIA10X9:EG-1	U013_S001	24
AA083014	ONE-WAY CLUTCH	U013_S001	25
AA083018	ROLLER CLUTCH - 6X14X10	U013_S001	26
AA100014	RETAINING RING C - SEPARATE	U005_S004	17
		U005_S005	17
		U013_S001	27
AA100016	RETAINING RINGS-C:DIA3	U011_S001	23
		U011_S002	23
		U011_S003	23
		U011_S004	23
		U011_S005	23
AA100018	STEPPED SCREW:FIX:FUSING	U011_S001	24
		U011_S002	24
		U011_S003	24
		U011_S004	24
		U011_S005	24
AA143219	STEPPED SCREW	U011	25
AA143537	SCREW:M3:BLACK	U001	7
		U003	18
AA143579	SCREW - M3	U013_S001	28
AA143592	SCREW- M4X6	U015	33
AA143595	STEPPED SCREW:M3	U001	8
AA143807	SCREW:A	U013_S001	29
AA143848	STEPPED SCREW - M3	U015	34
AA161167	BUSHING:HDD	U015	35

Number	Part Name	Group	ID
AB010156	GEAR:SEPARATE:DRIVE	U013_S001	30
AB010157	GEAR:SEPARATE:DRIVEN	U013_S001	31
AB011252	GEAR - 20Z	U013_S001	32
AB011571	GEAR:Z19:DRIVE:REGISTRATION	U010	13
AB011572	GEAR:Z19:DRIVEN:REGISTRATION	U005	18
AB011573	GEAR:REGISTRATION:NO.2	U005	19
AB012099	GEAR:ON-OFF:PRESSURE ROLLER	U011_S001	26
		U011_S002	26
		U011_S003	26
		U011_S004	26
		U011_S005	26
AB012107	GEAR:IDLER:EXIT:FUSING EXIT:1	U011_S001	27
		U011_S002	27
		U011_S003	27
		U011_S004	27
		U011_S005	27
AB012108	GEAR:IDLER:EXIT:FUSING EXIT:2	U011_S001	28
		U011_S002	28
		U011_S003	28
		U011_S004	28
		U011_S005	28
AB012109	GEAR:IDLER:EXIT:FUSING EXIT:3	U011_S001	29
		U011_S002	29
		U011_S003	29
		U011_S004	29
		U011_S005	29
AB012110	GEAR:EXIT ROLLER:FUSING EXIT:RIGHT	U011_S001	30
		U011_S002	30
		U011_S003	30
		U011_S004	30
		U011_S005	30
AB012111	GEAR:PRESSURE ROLLER:EXIT	U011_S001	31
		U011_S002	31
		U011_S003	31
		U011_S004	31
		U011_S005	31
AB012116	GEAR:DRIVE:FUSING UNIT	U011_S001	32

Copyright (c) 2006-2016 Ricoh Company, Ltd. 2016/07/29 Version 1.00

Number	Part Name	Group	ID
		U011_S002	32
		U011_S003	32
		U011_S004	32
		U011_S005	32
AB012117	GEAR:IDLER:PRESSURE ROLLER	U011_S001	33
		U011_S002	33
		U011_S003	33
		U011_S004	33
		U011_S005	33
AB012118	GEAR:PRESSURE ROLLER	U011_S001	34
		U011_S002	34
		U011_S003	34
		U011_S004	34
		U011_S005	34
AE020238	PRESSURE ROLLER:DIA32	U011_S001	35
		U011_S002	35
		U011_S003	35
		U011_S004	35
		U011_S005	35
AE030074	BALL BEARING:DIA17XDIA26X5	U011_S001	36
		U011_S002	36
		U011_S003	36
		U011_S004	36
		U011_S005	36
AF013006	BOTTOM PLATE PAD	U005_S008_S004	20
		U005_S009_S002	20
AF013016	BOTTOM PLATE PAD	U013_S001_S001	33
AF030049	PICK-UP ROLLER	U013_S001	34
AF030094	PAPER FEED ROLLER:PICKUP	U005_S004	21
		U005_S005	21
AF031046	FEED ROLLER - MANUAL FEED	U013_S001	35
AF031049	FEED ROLLER	U005_S004	22
		U005_S005	22
AF032046	SEPARATION ROLLER - MANUAL FEED	U013_S001	36
AF032049	SEPARATION ROLLER	U005_S004	23
		U005_S005	23
AF040571	GUIDE ROLLER	U012	16

Number	Part Name	Group	ID
AG070513	MAGNET CATCH	U001	9
AG070514	MAGNET CATCH	U009	10
AW010147	PHOTO REFLECTION SENSOR	U012	17
AW010155	ORIGINAL SENSOR:66MM:3.3V	U003	19
AW010200	PAPER FEED SENSOR:FUSING EXIT	U010_S001	14
AW020190	PHOTOINTERRUPTOR	U011	37
AW020198	PHOTOINTERRUPTOR:LG2A14NL1	U009	11
		U013_S001	37
AW020207	PHOTOINTERRUPTOR:FLAT:PICH 2MM:M4	U003	20
AW020224	PHOTOINTERRUPTOR:GP1A173LCSVF	U005_S004	24
		U005_S005	24
		U008	11
		U010	15
		U013_S001	38
		U013_S001_S001	38
AW100180	NON-CONTACT TYPE THERMISTOR:FUSING	U011_S001	38
		U011_S002	38
		U011_S003	38
		U011_S004	38
		U011_S005	38
AW100181	THERMISTOR:PRESSURE:FRONT	U011_S001	39
		U011_S002	39
		U011_S003	39
		U011_S004	39
		U011_S005	39
AW100182	THERMISTOR:PRESSURE:MIDDLE	U011_S001	40
		U011_S002	40
		U011_S003	40
		U011_S004	40
		U011_S005	40
AW100183	THERMOPILE	U011	41
AW110111	THERMOSTAT:MIDDLE	U011_S001	42
		U011_S002	42
		U011_S003	42
		U011_S004	42
		U011_S005	42

Copyright (c) 2006-2016 Ricoh Company, Ltd. 2016/07/29 Version 1.00

Number	Part Name	Group	ID
AW110112	THERMOSTAT:REAR	U011_S001	43
		U011_S002	43
		U011_S003	43
		U011_S004	43
		U011_S005	43
AW140026	TEMPERATURE & HUMIDITY SENSOR	U008	12
AW500039	ROTARY SWITCH:PAPER SIZE SENSOR:CW	U013_S001_S001	39
AW500040	PUSH SWITCH:SW1AG-550:10MA	U005	25
		U009	12
		U013	40
		U013_S001	40
AW500046	PUSH SWITCH:PAPER SIZE SENSOR	U005	26
AX040273	DC MOTOR:RISING TRAY:ASS'Y:1.007W:BRUSH	U005_S006	27
		U005_S007	27
AX060435	DC MOTOR:GEAR:10W:BRUSHLESS	U014_S001	25
AX060464	DC MOTOR:ENCODER:NO:10W:GEAR:BRUSHLESS	U013	41
		U013_S001	41
		U014_S002	26
		U014_S003	26
AX061001	DC BRUSHLESS MOTOR:40W:NMB	U014	27
AX061101	DC BRUSHLESS MOTOR:25W:NMB	U014	28
AX061202	DC BRUSHLESS MOTOR:25W:NID:FUSING UNIT	U014_S003	29
AX640199	FAN:MM80:25MM:DC 2.16W	U016	13
AX640219	DC FAN MOTOR:DC24V:MM60:25MM	U016	14
AX640236	FAN:MM60X15	U015	36
		U016	15
AX660015	DC FAN MOTOR:SIROCCO:DC24V:PWM	U016	16
AZ240271	(NA/TWN):DC POWER SUPPLY	U015	37
AZ240273	(EU/AA,KOR/CHN):DC POWER SU	U015	38

Number	Part Name	Group	ID
	PPLY		
AZ320215	POWER PACK:TTS:L	U015	39
B0651374	CLOTH - DF EXPOSURE GLASS	ACCESSORIES	11
B2231099	FLAT SCREW	U013_S001_S001	42
B2231317	SCREW	U015	40
B2232862	LEVER - RELEASE INNER	U005_S009	28
B2233241	SPRING:SHUTTER:PUMP UNIT	U006	12
B2234552	BUSHING:DIA4	U013_S001	43
B2236069	JOINT:DRIVE:INTERMEDIATE TRANSFER	U008_S001	13
B2236476	BUSHING - DIA5	U009	13
B2342864	PAD:CLEANER	U005_S008_S001	29
		U005_S008_S002	29
		U005_S009_S003	29
		U005_S009_S004	29
B2381088	COVER - CONNECTOR	U016	17
B2381089	COVER - POSITIONING PIN	U016	18
B6455020	SD Card (1GB)	SPECIAL TOOLS	5
B6455060	SD Card (16GB)	SPECIAL TOOLS	6
B8303504	TIMING BELT - 40S2M100	U005_S004	30
		U005_S005	30
C4019503	20X Magnification Scope	SPECIAL TOOLS	7
D0092573	PULLEY - VERTICAL TRANSPORT	U013_S001	44
D0092574	PULLEY - IDLER	U013_S001	45
D0094455	CUSHION - DC SOLENOID	U012	18
		U013_S001	46
D0094485	BUSHING - GATE	U013_S001	47
D0094487	COMPRESSION SPRING - GATE	U013_S001	48
D0292677	TRANSPORT BELT:DRIVEN:VERTICAL TRANSPORT	U013_S001	49
D0392566	TENSION SPRING:GRIP:RIGHT	U005_S008	31
		U005_S009	31
D0392993	SHAFT:TRANSPORT BELT:PULLEY	U013_S001	50
D0394525	COMPRESSION SPRING:SHAFT:GUIDE PLATE:EXIT	U013_S001	51
D0394529	STOPPER:GUIDE PLATE:ROLLER:DRIVEN	U013_S001	52

Copyright (c) 2006-2016 Ricoh Company, Ltd. 2016/07/29 Version 1.00

Number	Part Name	Group	ID
D0394597	TENSION SPRING:DRIVEN ROLLER	U013_S001	53
D0394925	ROLLER:REVERSE:DRIVEN	U012	19
D0394927	COMPRESSION SPRING:PRESSURE:REVERSE:DRIVEN	U012	20
D0892764	GEAR:FEED	U005_S004	32
		U005_S005	32
D0894465	SYNCHRONOUS BELT:S2M:136	U014_S003	30
D0895824	COVER:SD-CARD:D086/D087	U015	41
D0895887	PANEL:INTERFACE	U015	42
D1124264	DECAL:WARNING (HIGH TEMPERATURE):FUSING	U011_S001	44
		U011_S002	44
		U011_S003	44
		U011_S004	44
		U011_S005	44
D1175303	THERMISTOR	U016	19
D1175916	STEPPED SCREW:M3X8:SECOND KIND	U008	14
D1185170	PCB:DIODE	U010_S001	16
D1201556	(AA,KOR):SHEET:LOGO:LAN	ACCESSORIES	12
D1201557	(AA,KOR/CHN(D24322)(D24422)):SHEET:LOGO:GES	ACCESSORIES	13
D1292783	TORQUE LIMITER MECHANICAL CLUTCH:40MNM:DIA18	U013_S001	54
D1421805	SHAFT:SCALE	U015	43
D1441085	STEPPED SCREW:M3	U001	10
		U008_S001	15
D1444183	SCREW:M3	U003	21
D1444484	SHOULDER SCREW - M3	U012	21
D1444489	STOPPER:DRIVEN ROLLER	U013_S001	55
D1465680	HDD:250GB:JAGUARB7	U015	44
D1465786	BRACKET:HDD	U015	45
D1471177	TENSION SPRING:ARM:MCPG	U014	31
D1471805	EXPOSURE GLASS:DOCUMENT FEEDER:APPLY	U003	22
D1472734	GUIDE PLATE:SEPARATE	U005_S004_S001	33
		U005_S005_S001	33
D1472737	LEVER:PRESSURE:SEPARATE	U005_S004_S001	34

Number	Part Name	Group	ID
		U005_S005_S001	34
D1472738	LINK:RELEASE	U005_S004_S001	35
		U005_S005_S001	35
D1472752	SHAFT:SEPARATE:ASS'Y	U005_S004_S001	36
		U005_S005_S001	36
D1472866	COVER:PAPER TRAY:NO.2	U005_S009	37
D1473269	DRIVE UNIT:TONER BOTTLE:ASS'Y	U006_S001	13
		U006_S002	13
		U006_S003	13
		U006_S004	13
D1473281	HOUSING:TONER CARTRIDGE:BK:ASS'Y	U006_S005	14
D1473282	HOUSING:TONER CARTRIDGE:CMY:ASS'Y	U006_S006	15
		U006_S007	15
		U006_S008	15
D1473285	(TWN(D243)/CHN):TRANSPORT SCREW:NOZZLE:BK:ASS'Y	U006_S017	16
		U006_S018	16
D1473286	(TWN(D243)/CHN):TRANSPORT SCREW:NOZZLE:CMY:ASS'Y	U006_S019	17
		U006_S020	17
		U006_S021	17
		U006_S022	17
		U006_S023	17
		U006_S024	17
D1473325	TORSION SPRING:STOPPER:TONER CARTRIDGE:4.8N	U006_S005	18
		U006_S006	18
		U006_S007	18
		U006_S008	18
D1473494	COVER:PCU:REAR:ASS'Y	U007_S001	7
		U007_S002	7
		U007_S003	7
		U007_S004	7
D1477937	FILTER:PREVENTFENCE:10	U016_S001	20
D1477951	DUCT:SUPPLY:A	U016	21
D1477952	DUCT:SUPPLY:B	U016	22
D1477956	DUCT:EXHAUST:DRIVE:A	U016	23
D1477957	DUCT:EXHAUST:DRIVE:B	U016	24
D1482702	SPACER:TRANSPORT ROLLER	U005_S004	38
		U005_S005	38

Copyright (c) 2006-2016 Ricoh Company, Ltd. 2016/07/29 Version 1.00

Number	Part Name	Group	ID
D1482751	ARM:PRESSURE:SEPARATE	U005_S004_S001	39
		U005_S005_S001	39
D1482755	COIL SPRING:RELEASE:SEPARATE	U005_S004_S001	40
		U005_S005_S001	40
D1484681	BRACKET:MOTOR:PEEN	U013_S001	56
D1484690	TORSION SPRING:LINK	U013_S001	57
D1491099	COVER:GRIP:LEFT	U016	25
D1491168	BRACKET:DRIVE:COLLECTION BOTTLE:ASS'Y	U009	14
D1491173	GEAR:IDLER:TONER BOTTLE	U009	15
D1491174	GEAR:COLLECTION BOTTLE	U009	16
D1491194	PULLEY:PAPER FEED:FEED:NO.1:MECHANICAL ROLLER CLUTCH	U014_S002	32
D1491195	GEAR:IDLER:PAPER FEED:FEED	U014_S002	33
D1491196	GEAR:PAPER FEED:FEED:NO.2:MECHANICAL ROLLER CLUTCH	U014_S002	34
D1491197	GEAR:IDLER:PAPER FEED:GRIP:NO.1	U014_S002	35
D1491199	DRIVE UNIT:ON-OFF:TRANSFER	U014	36
D1491233	COVER:UPPER:INNER BACK	U001	11
D1491234	COVER:UPPER:INNER BACK:MIDDLE	U001	12
D1491237	COVER:UPPER:INNER BACK:LEFT LOWER	U001	13
D1491243	COVER:FRONT:UPPER:OPERATION SUB-UNIT	U001	14
D1491248	HINGE:COVER:FRONT:USED TONER	U001	15
D1491252	COVER:LEFT:UPPER:REAR	U001	16
D1491257	CAP:34X55	U001	17
D1491264	CAP:ROCKER SWITCH	ACCESSORIES	14
D1491274	INNER COVER:FRONT:USED TONER	U001	18
D1491278	TORSION SPRING:COVER:USED TONER	U001	19
D1491281	COVER:SCANNER:FRONT	U001	20
D1491291	CAP:HARNESS	U001	21
D1491294	CAP:HARNESS:CORNER	U001	22

Number	Part Name	Group	ID
D1491305	CAP:TOTAL COUNTER	U001	23
D1491307	SPRING PLATE:BAND	U001	24
D1491317	HOLDER:GLASS:CLEANER:ASS'Y	ACCESSORIES	15
D1491321	(NA/EU/AA,KOR/TWN):DECAL:TONER BOTTLE:BK	ACCESSORIES	16
D1491322	(NA/EU/AA,KOR/TWN):DECAL:TONER BOTTLE:C	ACCESSORIES	17
D1491323	(NA/EU/AA,KOR/TWN):DECAL:TONER BOTTLE:M	ACCESSORIES	18
D1491324	(NA/EU/AA,KOR/TWN):DECAL:TONER BOTTLE:Y	ACCESSORIES	19
D1491338	GUIDE PLATE:PAPER FEED TABLE:FRONT	U016	26
D1491351	DRIVE UNIT:REGISTRATION:ASS'Y	U014_S001	37
D1491352	BRACKET:DRIVE UNIT:REGISTRATION:ASS'Y	U014_S001	38
D1491355	GEAR:REGISTRATION:NO.1	U014_S001	39
D1491387	GROUND PLATE:DRIVE UNIT:ENGINE	U014	40
D1491392	FLANGE:PAPER FEED:FEED	U014_S002	41
D1491394	GROUND PLATE:DRIVE UNIT:FUSING/PAPER EXIT UNIT	U014	42
D1491397	TORQUE LIMITER MECHANICAL CLUTCH:49MNM:DIA14	U014_S003	43
D1491553	(NA/EU/AA,KOR/TWN/CHN(D24321)(D24421)):SHEET:LOGO	ACCESSORIES	20
D1491706	SYNCHRONOUS BELT:138ST1.5-4.0	U003	23
D1491798	SEAL:SHEET THROUGH:DOCUMENT FEEDER	U003	24
D1491804	HOLDER:EXPOSURE GLASS:SCANNER	U003	25
D1491833	SHEET:GLASS	U003	26
D1492557	GUIDE:REGISTRATION:ENTRANCE:REAR	U013_S001	58
D1492558	GUIDE:REGISTRATION:ENTRANCE:FRONT	U013_S001	59
D1492562	COLLAR:REGISTRATION ROLLER	U005	41

Copyright (c) 2006-2016 Ricoh Company, Ltd. 2016/07/29 Version 1.00

Number	Part Name	Group	ID
D1492566	CASE:REMOVE PAPER DUST:ASS'Y	U005	42
D1492576	GUIDE PLATE:REGISTRATION:FRONT LEFT	U005	43
D1492582	GUIDE PLATE:REGISTRATION:FRONT RIGHT	U010	17
D1492584	COLLAR:SHAFT:REGISTRATION ROLLER	U010	18
D1492585	GUIDE:REGISTRATION:REAR RIGHT	U010	19
D1492586	GUIDE:REGISTRATION:FRONT RIGHT	U010	20
D1492612	ROLLER:GRIP:DRIVEN	U013_S001	60
D1492613	SHAFT:GRIP:DRIVEN	U013_S001	61
D1492614	TENSION SPRING:GRIP:PRESSURE	U013_S001	62
D1492619	SHAFT:SEPARATOR:DRIVE:ASS'Y	U013_S001	63
D1492633	SHAFT:FEED:MANUAL FEED	U013_S001	64
D1492635	TRANSPORT ROLLER:MANUAL FEED	U013_S001	65
D1492638	LINK:PAPER STOPPER:MANUAL FEED	U013_S001	66
D1492639	SHAFT:PAPER STOPPER	U013_S001	67
D1492642	SHAFT:LINK:PAPER STOPPER	U013_S001	68
D1492655	FEELER:PAPER END SENSOR	U013_S001	69
D1492656	TORSION SPRING:PAPER END SENSOR	U013_S001	70
D1492658	COVER:PAPER FEED ROLLER	U013_S001	71
D1492686	WIRE:MANUAL FEED TABLE:TC075	U013_S001	72
D1492688	TENSION SPRING:WIRE	U013_S001	73
D1492692	ARM:MANUAL FEED:FRONT UPPER	U013_S001	74
D1492693	STOPPER:MANUAL FEED TABLE	U013_S001	75
D1492694	COMPRESSION SPRING:STOPPER:MANUAL FEED TABLE	U013_S001	76
D1492712	SHEET:GUIDE PLATE:SWIVEL	U005_S003	44
D1492713	GUIDE PLATE:SWIVEL:NO.1	U005_S003	45

Number	Part Name	Group	ID
D1492721	GUIDE PLATE:SWIVEL:NO.2	U005	46
D1492739	LEVER:PRESSURE RELEASE	U005_S004_S001	47
		U005_S005_S001	47
D1492772	ARM:PICKUP	U005_S004	48
		U005_S005	48
D1492773	PULLEY:PICKUP:MECHANICAL ROLLER CLUTCH	U005_S004	49
		U005_S005	49
D1492774	PULLEY:IDLER:PICKUP	U005_S004	50
		U005_S005	50
D1492775	SHAFT:FEED:ASS'Y	U005_S004	51
		U005_S005	51
D1492777	COIL SPRING:PRESSURE:PICKUP	U005_S004	52
		U005_S005	52
D1492778	FEELER:PAPER END	U005_S004	53
		U005_S005	53
D1492781	GROUND PLATE:PAPER FEED UNIT	U005_S004	54
		U005_S005	54
D1492787	BRACKET:SUPPORT:COVER	U005	55
D1492788	INNER COVER:HARNESS:PAPER FEED UNIT	U005	56
D1492791	GUIDE:FEED	U005_S004	57
		U005_S005	57
D1492812	ROLLER:PAPER TRAY:DIA19	U005_S008	58
		U005_S009	58
D1492814	COIL SPRING:EARTH	U005_S008	59
		U005_S009	59
D1492816	SHAFT:RISE:ASS'Y	U005_S008	60
		U005_S009	60
D1492818	LEVER:RISE	U005_S008	61
		U005_S009	61
D1492824	LEVER:STOPPER:FRONT	U005_S008_S001	62
		U005_S009_S003	62
D1492826	COMPRESSION SPRING:SIDE FENCE:PLATE:FRONT	U005_S008_S001	63
		U005_S009_S003	63
D1492827	COMPRESSION SPRING:SIDE FENCE:POSITIONING	U005_S008_S001	64
		U005_S009_S003	64
D1492828	SIDE FENCE:FRONT:NO.1:ASS'Y	U005_S008_S001	65
D1492834	GUIDE:FEELER:PAPER END	U005_S008_S002	66

Copyright (c) 2006-2016 Ricoh Company, Ltd. 2016/07/29 Version 1.00

Number	Part Name	Group	ID
D1492835	RACK:SIDE FENCE	U005_S008	67
		U005_S009	67
D1492836	GEAR:Z20	U005_S008	68
		U005_S009	68
D1492838	SIDE FENCE:REAR:NO.1:ASS'Y	U005_S008_S002	69
D1492840	END FENCE:PAPER TRAY:ASS'Y	U005_S008_S003	70
		U005_S009_S001	70
D1492842	LEVER:END FENCE	U005_S008_S003	71
		U005_S009_S001	71
D1492843	CLICK:END FENCE	U005_S008_S003	72
		U005_S009_S001	72
D1492845	COMPRESSION SPRING:END FENCE:LEVER:5N	U005_S008_S003	73
		U005_S009_S001	73
D1492846	DECAL:SIZE INDICATION:END FENCE:NO.1:FRONT	U005_S008	74
D1492847	DECAL:SIZE INDICATION:END FENCE:NO.1:REAR	U005_S008	75
D1492848	DECAL:SIZE INDICATION:END FENCE:NO.2:FRONT	U005_S009	76
D1492849	DECAL:SIZE INDICATION:END FENCE:NO.2:REAR	U005_S009	77
D1492850	TRAY BOTTOM PLATE:ASS'Y	U005_S008_S004	78
D1492856	GRIP:PAPER TRAY	U005_S008	79
		U005_S009	79
D1492857	LEVER:RELEASE:INNER:NO.1	U005_S008	80
D1492859	SHAFT:RELEASE:PAPER TRAY:NO.1	U005_S008	81
D1492861	HOLDER:GRIP:PAPER TRAY	U005_S008	82
		U005_S009	82
D1492862	SHAFT:RELEASE:PAPER TRAY:NO.2	U005_S009	83
D1492863	DECAL:PAPER SET DIRECTION:TRAY:NO.1	U005_S008	84
D1492864	DECAL:PAPER SET DIRECTION:TRAY:NO.2	U005_S009	85
D1492873	TRAY BOTTOM PLATE:NO.2:ASS'Y	U005_S009_S002	86
D1492887	COVER:TRAY:REAR LEFT:NO.1	U005	87
D1492889	COVER:TRAY:REAR LEFT:NO.2	U005	88

Number	Part Name	Group	ID
D1492898	COVER:HEATER:PAPER TRAY	HEATER:PAPER TRAY:ASS'Y:SUB PARTS	3
D1492899	HEAT SINK:HEATER	HEATER:PAPER TRAY:ASS'Y:SUB PARTS	4
D1492903	SUPPORTER:RIGHT:NO.2:ASS'Y	U005_S002	89
D1492905	SUPPORTER:RIGHT:NO.1:ASS'Y	U005_S001	90
D1492918	SUPPORTER:LEFT UPPER:NO.1	U005	91
D1492923	ROLLER:SUPPORTER:PAPER TRAY	U005_S002	92
D1492924	STOPPER:PAPER TRAY	U005_S001	93
		U005_S002	93
D1492925	SUPPORTER:LEFT:NO.2	U005	94
D1492928	ROLLER:SUPPORTER:PAPER TRAY:LEFT	U005	95
D1492930	SUPPORTER:LEFT LOWER:NO.1:PEEN	U005	96
D1492952	DECAL:SIDE FENCE:PAPER VOLUME	U005_S008_S002	97
		U005_S009_S004	97
D1492954	DECAL:SIDE FENCE:PAPER VOLUME:ENVELOPE	U005_S009_S004	98
D1492956	ROLLER:SUPPORTER:PAPER TRAY	U005_S001	99
D1492958	ROLLER:SUPPORTER:PAPER TRAY:LEFT	U005	100
D1492990	PLAIN SHAFT BEARING:DRIVE:REGISTRATION ROLLER	U010	21
D1493210	DC MOTOR:TONER BOTTLE:ASS'Y:5.28W:BRUSH	U006_S001	19
		U006_S002	19
		U006_S003	19
		U006_S004	19
D1493240	TONER HOPPER:TONER SUPPLY:BK:ASS'Y	U006_S009	20
D1493270	TONER HOPPER:TONER SUPPLY:C:ASS'Y	U006_S010	21
D1493280	TONER HOPPER:TONER SUPPLY:M:ASS'Y	U006_S011	22

Copyright (c) 2006-2016 Ricoh Company, Ltd. 2016/07/29 Version 1.00

Number	Part Name	Group	ID
D1493307	BASE:TONER SUPPLY	U006	23
D1493310	TONER HOPPER:TONER SUPPLY:Y:ASS'Y	U006_S012	24
D1493321	DUCT:VERTICAL TRANSPORT:TONER SUPPLY	U006	25
D1493322	SHUTTER:DUCT:TONER SUPPLY	U006	26
D1493330	SEAL:CONNECTION:CARTRIDGE:TONER SUPPLY	U006	27
D1493331	COVER:GEAR:TONER SUPPLY SUB-UNIT	U006	28
D1493350	DC STEPPER MOTOR:TONER SUPPLY	U006_S009	29
		U006_S010	29
		U006_S012	29
D1494202	ENCODER:ON-OFF:PRESSURE ROLLER	U011_S001	45
		U011_S002	45
		U011_S003	45
		U011_S004	45
		U011_S005	45
D1494205	BRAKE:CAM	U011_S001	46
		U011_S002	46
		U011_S003	46
		U011_S004	46
		U011_S005	46
D1494207	PLATE:CAM	U011_S001	47
		U011_S002	47
		U011_S003	47
		U011_S004	47
		U011_S005	47
D1494208	CAM:ON-OFF:PRESSURE ROLLER	U011_S001	48
		U011_S002	48
		U011_S003	48
		U011_S004	48
		U011_S005	48
D1494209	SHAFT:ON-OFF:PRESSURE ROLLER	U011_S001	49
		U011_S002	49
		U011_S003	49
		U011_S004	49
		U011_S005	49

Number	Part Name	Group	ID
D1494235	STEPPED SCREW:M3	U011_S001	50
		U011_S002	50
		U011_S003	50
		U011_S004	50
		U011_S005	50
D1494335	ELECTRODE PLATE:CONNECTING:THERMOSTAT	U011_S001	51
		U011_S002	51
		U011_S003	51
		U011_S004	51
		U011_S005	51
D1494390	(NA/AA,KOR):DECAL:CAUTION:INK JET	ACCESSORIES	21
D1494421	GEAR:EXIT ROLLER	U012	22
D1494422	GEAR:REVERSE ROLLER	U012	23
D1494423	SYNCHRONOUS BELT:40S2M122	U012	24
D1494425	DC STEPPER MOTOR:REVERSE:SUB-ASS'Y	U012	25
D1494427	STUD:PULLEY:BRACKET:DC STEPPER MOTOR	U012	26
D1494428	GROUND PLATE:PAPER EXIT UNIT	U012	27
D1494429	PULLEY:GEAR:REVERSE	U012	28
D1494434	TENSION SPRING:LEVER:GATE PAWL	U012	29
D1494468	SHAFT:DRIVEN:REVERSE ROLLER	U012	30
D1494469	SPRING PLATE:ROLLER:DRIVEN:REVERSE ROLLER	U012	31
D1494471	SHAFT:DRIVEN:REVERSE ROLLER:OUTER	U012	32
D1494484	TORSION SPRING:LEVER:GATE PAWL	U012	33
D1494492	TRAY:REVERSE	U001	25
D1494638	GUIDE:WIRE	U013_S001	77
D1494646	SYNCHRONOUS BELT:30S2M262	U013_S001	78
D1494647	SYNCHRONOUS BELT:30S2M212	U013_S001	79
D1494653	TENSION SPRING:SWIVEL	U013_S001	80
D1494655	GRIP:DUPLEX UNIT	U013_S001	81

Copyright (c) 2006-2016 Ricoh Company, Ltd. 2016/07/29 Version 1.00

Number	Part Name	Group	ID
D1494656	HOOK:STOPPER:DUPLEX UNIT:FRONT	U013_S001	82
D1494657	HOOK:STOPPER:DUPLEX UNIT:REAR	U013_S001	83
D1494658	COIL SPRING:LEVER:DUPLEX	U013_S001	84
D1494662	DIFFUSION PLATE:LED	U010_S001	22
D1494672	COMPRESSION SPRING:DRIVEN	U013_S001	85
D1494675	COVER:PUSH SWITCH	U013_S001	86
D1494688	LINK:DUPLEX:MAIN	U013_S001	87
D1494695	LINK:FRONT	U013_S001	88
D1494711	DECAL:SIDE FENCE:MANUAL FEED	U013_S001_S001_S002	89
D1494715	DECAL:GRIP:Z	U013_S001	90
D1494717	PLATE:SIDE FENCE:FRONT	U013_S001_S001_S001	91
D1494718	TORSION SPRING:SIDE FENCE:FRONT	U013_S001_S001_S001	92
D1494720	PLATE:SIDE FENCE:REAR	U013_S001_S001_S002	93
D1494721	TORSION SPRING:SIDE FENCE:REAR	U013_S001_S001_S002	94
D1494731	COMPRESSION SPRING:RACK:MANUAL FEED	U013_S001_S001	95
D1494755	BRACKET:HINGE:DUPLEX:FRONT	U013	96
D1494770	SHAFT:SEPARATOR:DRIVEN:ASS'Y	U013_S001_S002	97
D1494777	COMPRESSION SPRING:FLAT CONVEYER BELT:DRIVEN	U013_S001	98
D1494815	GUIDE PLATE:SEPARATOR:ASS'Y	U013_S001	99
D1494850	ARM:PUSH SWITCH	U013_S001	100
D1494883	ARM:MANUAL FEED:FRONT LOWER	U013_S001_S001	101
D1494884	ARM:MANUAL FEED:REAR LOWER	U013_S001_S001	102
D1495174	(TWN(D243)/CHN):PCB:TCB	U006	30
D1495703	BRACKET:MICRO SWITCH	U015	46
D1495711	BRACKET:ARM:SAFETY SWITCH:FRONT	U015	47

Number	Part Name	Group	ID
D1495713	ARM:SAFETY SWITCH:FRONT	U015	48
D1495714	SHAFT:ARM:SAFETY SWITCH	U015	49
D1495717	BASE:SAFETY SWITCH	U015	50
D1495718	TORSION SPRING:SAFETY SWITCH	U015	51
D1495726	LEVER:SAFETY SWITCH:RIGHT	U015	52
D1495776	COVER:USB:SMALL	U015	53
D1495810	BRACKET:RACK:UPPER	U015	54
D1495818	SPACER:FFC	U015	55
D1495824	COVER:CONNECTOR:HEATER:0.4MM	U015	56
D1495883	KEYTOP:MAIN SWITCH	U001	26
D1495884	COMPRESSION SPRING:KEYTOP	U001	27
D1496030	CAM:ON-OFF:COLLAR	U008_S001	16
D1496036	CAM:ON-OFF:BK	U008_S001	17
D1496037	STOPPER:RIGHT:INTERMEDIATE TRANSFER	U008_S001	18
D1496038	LEVER:ON-OFF:BK	U008_S001	19
D1496172	BRACKET:BELT CLEANING:FRONT	U008	20
D1496173	BRACKET:BELT CLEANING:REAR	U008	21
D1496177	HOLDER:DISCHARGE USED TONER:ASS'Y	U008_S002	22
D1496179	GEAR:IDLER:DISCHARGE USED TONER	U008_S002	23
D1496192	LEVER:DISCHARGE USED TONER	U008_S002	24
D1496194	SHAFT:LEVER:DISCHARGE USED TONER	U008_S002	25
D1496195	CAM:DISCHARGE USED TONER	U008_S002	26
D1496226	LEVER:TRANSFER/SEPARATION UNIT:FRONT	U010_S001_S001	23
		U010_S001_S002	23
		U010_S001_S003	23
		U010_S001_S004	23
		U010_S001_S005	23
D1496227	LEVER:SET:FRONT	U010_S001	24
D1496228	TORSION SPRING:LEVER:SET:FRONT	U010_S001	25
D1496229	TENSION SPRING:LEVER:SET	U010_S001	26

Copyright (c) 2006-2016 Ricoh Company, Ltd. 2016/07/29 Version 1.00

Number	Part Name	Group	ID
D1496231	LEVER:TRANSFER/SEPARATION UNIT:REAR	U010_S001	27
D1496232	LEVER:SET:REAR	U010_S001	28
D1496233	TORSION SPRING:LEVER:SET:REAR	U010_S001	29
D1496242	COMPRESSION SPRING:PRESSURE:TRANSFER ROLLER	U010_S001	30
D1496243	RECEIVE PLATE:COMPRESSION SPRING:TRANSFER ROLLER	U010_S001	31
D1496245	GROUND PLATE:TRANSFER/SEPARATION UNIT	U010_S001	32
D1496246	LINK:TRANSFER/SEPARATION UNIT	U010_S001	33
D1496248	CAP:LED	U010_S001	34
D1496254	DECAL:GRIP:B:LOWER	U010_S001	35
D1496257	GROUND PLATE:REGISTRATION ROLLER	U010_S001	36
D1496290	GUIDE:SET:TRANSFER/SEPARATION UNIT:FRONT	U010	37
D1496291	GUIDE:SET:TRANSFER/SEPARATION UNIT:REAR	U010	38
D1496295	COVER:HARNESS:TRANSFER/SEPARATION UNIT	U010	39
D1496309	SHAFT:ON-OFF:COLLAR:MAIN	U008	27
D1496310	BRACKET:ON-OFF:COLLAR	U008	28
D1496311	GEAR:ON-OFF:COLLAR:OUTPUT	U008	29
D1496312	JOINT:ON-OFF:COLLAR	U008	30
D1496318	DC STEPPER MOTOR:ON-OFF	U006_S011	31
D1496320	TERMINAL:BIAS:INTERMEDIATE TRANSFER:MAIN	U008	31
D1496321	HOLDER:TERMINAL:INTERMEDIATE TRANSFER:MAIN	U008	32
D1496336	TRANSFER ROLLER:ASS'Y	U008_S001	33
D1496370	TONER OUTLET UNIT:BELT CLEANING:ASS'Y	U008_S002	34
D1496552	GEAR:IDLER:Z30	U009	17
D1496553	GEAR:IDLER:Z61	U009	18
D1496554	GEAR:PULLEY:IDLER:Z16	U009	19

Number	Part Name	Group	ID
D1496555	GEAR:IDLER:Z21	U009	20
D1496556	TENSION SPRING:BELT TENSIONER	U009	21
D1496557	SYNCHRONOUS BELT:40S3M564	U009	22
D1496561	PULLEY:USED TONER	U009	23
D1496562	BRACKET:TIGHTENER:USED TONER	U009	24
D1496571	BRACKET:PULLEY:IDLER:USED TONER	U009	25
D1496574	GEAR:PULLEY:IDLER:Z18	U009	26
D1496575	FLANGE:IDLER:USED TONER	U009	27
D1496581	SHAFT:DRIVE:USED TONER:RIGHT	U009	28
D1496582	GEAR:USED TONER:RIGHT	U009	29
D1496583	GEAR:USED TONER:INPUT	U009	30
D1496586	SHAFT:DRIVE:USED TONER:LEFT	U009	31
D1496587	GEAR:USED TONER:LEFT	U009	32
D1496592	RAIL:COLLECTION BOTTLE	U009	33
D1496667	(CHN):DECAL:CAUTION:INKJET	ACCESSORIES	22
D1496668	(TWN):DECAL:CAUTION:INKJET	ACCESSORIES	23
D1496766	(NA/EU/AA,KOR):DECAL:CAUTION:ORIGINAL	ACCESSORIES	24
D1496767	(CHN):DECAL:CAUTION:ORIGINAL	ACCESSORIES	25
D1496768	(TWN):DECAL:CAUTION:ORIGINAL	ACCESSORIES	26
D1496851	(NA/AA,KOR):DECAL:MAIN SWITCH:ON-STANDBY	ACCESSORIES	27
D1496852	(EU/TWN/CHN):DECAL:MAIN SWITCH:ON-STANDBY	ACCESSORIES	28
D1496859	DECAL:CLEANING:SHIELD GLASS	U001	28
D1496862	DECAL:SIZE INDICATION:PAPER TRAY	ACCESSORIES	29
D1496893	DECAL:PCU:BLACK	U001	29
D1496894	DECAL:PCU:CYAN	U001	30
D1496895	DECAL:PCU:MAGENTA	U001	31
D1496896	DECAL:PCU:YELLOW	U001	32
D1497922	COVER:FAN:DEVELOPMENT:RIGHT LOWER	U016	27
D1497923	DUCT:DEVELOPMENT:RIGHT LOW	U016	28

Copyright (c) 2006-2016 Ricoh Company, Ltd. 2016/07/29 Version 1.00

Number	Part Name	Group	ID
	ER		
D1497931	DUCT:DEVELOPMENT:EXHAUST	U016	29
D1497932	DUCT:PCU:EXHAUST	U016	30
D1497935	CASE:FILTER:ASS'Y	U016_S001	31
D1497938	OZONE FILTER	U016_S001	32
D1497953	DUCT:SUPPLY:C	U016	33
D1497954	DUCT:SUPPLY:D	U016	34
D1497955	DUCT:SUPPLY:FAN:UPPER	U016	35
D1497956	DUCT:SUPPLY:FAN:LOWER	U016	36
D1497982	DUCT:POWER SUPPLY UNIT	U016	37
D1497983	BRACKET:FAN:POWER SUPPLY UNIT	U016	38
D1497984	DUCT:REAR:POWER SUPPLY UNIT	U001	33
D1497986	GUIDE:THERMISTOR	U016	39
D1501095	BRACKET:POSITIONING:FUSING UNIT:M3	U016	40
D1501235	COVER:UPPER:INNER BACK:BIN	U001	34
D1501250	COVER:LEFT	U001	35
D1501282	COVER:SCANNER:UPPER:FRONT	U001	36
D1501290	COVER:SCANNER:UPPER:REAR	U001	37
D1502666	GEAR:SIDE FENCE:MANUAL FEED TABLE	U013_S001_S001	103
D1751377	GEAR:PRESSURE RELEASE:NO.3	U014_S003	44
D1752784	GUIDE PLATE:SENSOR:PAPER FEED	U005_S004	101
		U005_S005	101
D1752854	TENSION SPRING:GRIP:LEFT	U005_S008	102
		U005_S009	102
D1752858	LEVER:RELEASE:PAPER TRAY:OUTER	U005_S008	103
		U005_S009	103
D1752872	LINK:END FENCE:PAPER SIZE SENSOR	U005_S009	104
D1752886	COVER:TRAY:REAR RIGHT:NO.1	U005	105
D1752888	COVER:TRAY:REAR RIGHT:NO.2	U005	106
D1754654	SHAFT:LEVER:LOCK	U013_S001	104
D1754737	PLAIN SHAFT BEARING:DUPLEX:EXIT	U013_S001	105
D1771302	CLEANER:SHIELD GLASS:ASS'Y	U001	38

Number	Part Name	Group	ID
D1773285	(NA/EU/AA,KOR/TWN(D244)):TRANSPORT SCREW:NOZZLE:BK:ASS'Y	U006_S013	32
		U006_S025	32
		U006_S026	32
		U006_S027	32
D1773286	(NA/EU/AA,KOR/TWN(D244)):TRANSPORT SCREW:NOZZLE:CMY:ASS'Y	U006_S014	33
		U006_S015	33
		U006_S016	33
		U006_S028	33
		U006_S029	33
		U006_S030	33
		U006_S031	33
		U006_S032	33
		U006_S033	33
		U006_S034	33
		U006_S035	33
		U006_S036	33
D1775172	(NA/EU/AA,KOR/TWN(D244)):PCB:TCB	U006	34
D1889360	POWER PACK:CB:ASS'Y	U015_S001	57
D1961485	(NA/EU/AA,KOR/TWN):IC:NFC_TAG:MN63Y3212NB	ACCESSORIES	30
D2021143	JOINT:DRIVE	U014_S002	45
D2021152	BRACKET:DRIVE UNIT:PAPER FEED:ASS'Y	U014_S002_S001	46
D2021191	GEAR:GRIP:NO.1	U014_S002	47
D2021193	STUD:PAPER FEED:GRIP:ASS'Y	U014_S002	48
D2021195	PULLEY:GRIP:NO.2	U014_S002	49
D2021196	HOUSING:DRIVE UNIT:PAPER FEED:ASS'Y	U014_S002	50
D2022614	COIL SPRING:RELEASE:PICKUP:MANUAL FEED	U013_S001	106
D2022617	ARM:PICKUP:MANUAL FEED	U013_S001	107
D2022618	SHEET:PICKUP	U013_S001	108
D2022619	TORSION SPRING:PICKUP	U013_S001	109
D2022620	SHOE:TORSION SPRING:PICKUP	U013_S001	110
D2022624	COVER:PAPER END	U013_S001	111
D2022638	FEELER:PAPER SIZE SENSOR:MANUAL FEED	U013_S001_S001	112

Copyright (c) 2006-2016 Ricoh Company, Ltd. 2016/07/29 Version 1.00

Number	Part Name	Group	ID
D2022640	EXTENSION TRAY:NO.1	U013_S001	113
D2022641	EXTENSION TRAY:NO.2	U013_S001	114
D2022642	PULLEY:WIRE:MANUAL FEED TABLE	U013_S001	115
D2022646	ARM:MANUAL FEED:REAR UPPER	U013_S001	116
D2022654	CUSHION:GUIDE PLATE:SEPARATOR	U013_S001	117
D2022669	COVER:MANUAL FEED TABLE	U013_S001	118
D2022676	DECAL:SCALE:MANUAL FEED:MIDDLE	U013_S001_S001	119
D2022677	DECAL:SCALE:MANUAL FEED:REAR	U013_S001_S001	120
D2024477	REVERSE ROLLER	U012	34
D2024673	FEELER:DUPLEX:ENTRANCE SENSOR	U013_S001	121
D2024674	TORSION SPRING:DUPLEX:ENTRANCE SENSOR	U013_S001	122
D2024682	DRIVEN ROLLER:DIA16	U013_S001	123
D2024692	SHAFT:PRESSURE:GUIDE PLATE:UPPER	U013_S001	124
D2024721	BRACKET:LINK:DUPLEX	U013_S001	125
D2024722	LINK:DUPLEX	U013_S001	126
D2024726	TORSION SPRING:LINK:CONTACT POINT	U013_S001	127
D2025185	PCB:DHB	HEATER:PAPER TRAY:ELECTRICAL COMPONENTS SECTION:ASS'Y:SUB PARTS	2
		HEATER:SCANNER:PHOTOCONDUCTOR:ELECTRICAL COMPONENTS SECTION:ASS'Y:SUB PARTS	3
D2026255	DECAL:GRIP:B	U010_S001	40
D2231381	(NA(17)/EU/TWN):DECAL:EXPOSURE GLASS:CLEANING	ACCESSORIES	31

Number	Part Name	Group	ID
D2380071	(NA/TWN):HEATER:SCANNER:120V:ASS'Y	HEATER:SCANNER:ASS'Y	1
D2380072	(EU/AA,KOR/CHN):HEATER:SCANNER:220/240V:ASS'Y	HEATER:SCANNER:ASS'Y	2
D2385645	(D243):PCB:CTL:SERVICE	U015	58
D2385646	(D244):PCB:CTL:SERVICE	U015	59
D2386630	(NA/TWN):HEATER:PAPER TRAY:120V:ASS'Y	HEATER:PAPER TRAY:ASS'Y	1
D2386640	(EU/AA,KOR/CHN):HEATER:PAPER TRAY:220/240V:ASS'Y	HEATER:PAPER TRAY:ASS'Y	2
D2386650	HEATER:SCANNER:ELECTRICAL COMPONENTS SECTION:ASS'Y	HEATER:SCANNER:PHOTOCONDUCTOR:ELECTRICAL COMPONENTS SECTION:ASS'Y	1
D2386661	(NA/TWN):HEATER:PAPER TRAY:ELECTRICAL COMPONENTS SECTION:ASS'Y	HEATER:PAPER TRAY:ELECTRICAL COMPONENTS SECTION:ASS'Y	1
D2386662	(EU/AA,KOR/CHN):HEATER:PAPER TRAY:ELECTRICAL COMPONENTS SECTION:ASS'Y	HEATER:PAPER TRAY:ELECTRICAL COMPONENTS SECTION:ASS'Y	2
D2391107	DC SOLENOID:ASS'Y	U014	51
D2391109	BRACKET:DC SOLENOID:ASS'Y	U014	52
D2391255	COVER:LEFT:INTERFACE	U001	39
D2391855	OPTICAL WRITING UNIT	U004_S001	9
D2394012	(EU/AA,KOR/CHN):FUSING UNIT	U011_S001	52
		U011_S002	52
		U011_S003	52
D2394042	(EU/AA,KOR/CHN):SLEEVE:FUSING	U011_S001_S001	53
		U011_S002_S001	53
		U011_S003_S001	53
D2394262	(EU/AA,KOR/CHN):FUSING COVER:LOWER	U011_S001	54
		U011_S002	54

Copyright (c) 2006-2016 Ricoh Company, Ltd. 2016/07/29 Version 1.00

Number	Part Name	Group	ID
		U011_S003	54
D2395114	(CHN):BCU:TYPE-H3:ASS'Y	U015	60
D2395644	(CHN):PCB:IMAGE PROCESSING UNIT	U015	61
D2395772	PANEL:CONTROL BOARD:D238/D239	U015	62
D2395883	GROUND PLATE:BCU	U015	63
D2395884	BRACKET:BCU	U015	64
D2395888	COVER:FAX	U015	65
D2395889	RAIL:FAX	U015	66
D2395898	BRACKET:HELM	U015	67
D2395899	CAP:HELM	U015	68
D2399591	NVRAM	U015	69
D2399901	(NA/EU(D24327,65,95)(D24427)/AA, KOR(29)/TWN/CHN):LEVER:TRANSFER/SEPARATION UNIT:FRONT	U010_S001_S001	41
		U010_S001_S002	41
		U010_S001_S003	41
		U010_S001_S004	41
		U010_S001_S005	41
D2411230	COVER:UPPER	U001	40
D2411231	COVER:UPPER:FRONT	U001	41
D2411232	COVER:UPPER:EXIT	U001	42
D2411241	COVER:FRONT	U001	43
D2411242	COVER:MAIN SWITCH	U005_S008	107
D2411244	COVER:FRONT:RIGHT UPPER	U001	44
D2411245	COVER:FRONT:UPPER	U001	45
D2411247	COVER:FRONT:USED TONER	U001	46
D2411251	COVER:LEFT:UPPER	U001	47
D2411260	COVER:REAR:LOWER	U001	48
D2411261	COVER:REAR	U001	49
D2411263	CAP:LOUVER:DEODORIZE FILTER	U001	50
D2411266	COVER:RIGHT:FRONT LOWER	U001	51
D2411273	INNER COVER:FRONT:LOWER	U001	52
D2411275	INNER COVER:FRONT:RIGHT LOWER	U001	53
D2411284	COVER:SCANNER:LEFT	U001	54
D2411285	COVER:SCANNER:UPPER:LEFT	U001	55
D2411287	COVER:SCANNER:RIGHT	U001	56
D2411288	COVER:SCANNER:UPPER:RIGHT	U001	57

Number	Part Name	Group	ID
D2411297	BRACKET:COVER:LEFT UPPER REAR	U001	58
D2411298	INNER COVER:RIGHT	U001	59
D2411308	BAND:STOPPER:DOOR	U001	60
D2411309	MAGNET CATCH	U001	61
D2411357	DRIVE UNIT:FUSING/PAPER EXIT UNIT:ASS'Y	U014_S003	53
D2411378	GEAR:FUSING:NO.3	U014_S003	54
D2411396	HOLDER:TORQUE LIMITER MECHANICAL CLUTCH:PRESSURE RELEASE	U014_S003	55
D2411399	DRIVE UNIT:PAPER FEED:ASS'Y	U014_S002	56
D2411417	OPERATION SUB-UNIT:ASS'Y	U002_S001	6
D2411591	BRACKET:OPERATION SUB-UNIT:PEEN	U002	7
D2411598	COVER:BRACKET:OPERATION SUB-UNIT:LOWER	U002	8
D2411599	COVER:BRACKET:OPERATION SUB-UNIT:UPPER	U002	9
D2411678	SHEET:FFC:LOWER	U003	27
D2411680	GUIDE ROD	U003	28
D2411681	STAY:GUIDE ROD	U003	29
D2411684	COVER:HARNESS:SCANNER	U003	30
D2411685	SPRING PLATE:GUIDE ROD	U003	31
D2411686	CLAMP:STAY:GUIDE ROD	U003	32
D2411688	SHEET:GLASS:LARGE	U003	33
D2411689	HOLDER:EXPOSURE GLASS	U003	34
D2411697	SLIDE RAIL	U003	35
D2411698	COVER:BASE:SCANNER	U003	36
D2411701	PULLEY:IDLER:LEADING EDGE	U003	37
D2411702	CAP:PULLEY:IDLER:LEADING EDGE	U003	38
D2411708	TIGHTENER:DIA8	U003	39
D2411710	PULLEY:IDLER:TRAILING EDGE	U003	40
D2411711	CAP:IDLER:TRAILING EDGE	U003	41
D2411712	TENSION SPRING:TIGHTENER:TENSION:4N	U003	42
D2411713	SYNCHRONOUS BELT:890ST55-4.	U003	43

Copyright (c) 2006-2016 Ricoh Company, Ltd. 2016/07/29 Version 1.00

Number	Part Name	Group	ID
	0		
D2411715	PULLEY:DRIVE	U003	44
D2411716	CAP:PULLEY:DRIVE:UPPER	U003	45
D2411717	CAP:PULLEY:DRIVE:LOWER	U003	46
D2411719	DC STEPPER MOTOR	U003	47
D2411722	TENSION SPRING:TENSION:11N	U003	48
D2411727	SHEET:GAP:ASS'Y	U003	49
D2411732	(EU/AA,KOR/TWN/CHN):SCALE:LEFT:MM:ASS'Y	U003	50
D2411733	COVER:SHEET THROUGH:DOCUMENT FEEDER	U003	51
D2411734	(NA):SCALE:LEFT:INCH:ASS'Y	U003	52
D2411738	(EU/AA,KOR/TWN/CHN):SCALE:REAR:PRINTING:MM	U003	53
D2411739	(NA):SCALE:REAR:PRINTING:INCH	U003	54
D2411741	BRACKET:DOCUMENT FEEDER:LEFT	U003	55
D2411742	BRACKET:DOCUMENT FEEDER:RIGHT	U003	56
D2411744	DOCUMENT FEEDER:CABLE:BRACKET	U003	57
D2411775	COVER:HEATER:SCANNER	HEATER:SCANNER:ASS'Y:SUB PARTS	3
D2411776	BRACKET:HEATER:SCANNER	HEATER:SCANNER:ASS'Y:SUB PARTS	4
D2411788	CAP:COVER:POSITIONING	ACCESSORIES	32
D2412559	SHAFT:REGISTRATION ROLLER:DRIVEN	U005	108
D2412583	REGISTRATION ROLLER:DRIVE	U010	42
D2412612	DC SOLENOID:PICKUP:ASS'Y	U013_S001	128
D2412627	MANUAL FEED TABLE:ASS'Y	U013_S001_S001	129
D2412630	SIDE FENCE:FRONT:ASS'Y	U013_S001_S001_S001	130
D2412632	SIDE FENCE:REAR:ASS'Y	U013_S001_S001_S002	131
D2412634	RACK:MANUAL FEED	U013_S001_S001	132

Number	Part Name	Group	ID
D2412637	PAPER STOPPER:MANUAL FEED	U013_S001	133
D2412641	COVER:PAPER STOPPER:MANUAL FEED	U013_S001	134
D2412643	ARM:LINK:PAPER STOPPER	U013_S001	135
D2412644	TORSION SPRING:LINK:PAPER STOPPER	U013_S001	136
D2412652	GROUND PLATE:SHAFT:FEED	U013_S001	137
D2412653	COIL SPRING:PRESSURE:SEPARATOR	U013_S001	138
D2412656	HOLDER:HARNESS	U013_S001	139
D2412663	DECAL:SCALE:MANUAL FEED:FRONT	U013_S001_S001	140
D2412673	GUIDE PLATE:VERTICAL TRANSPORT:NO.1:DRIVEN	U013_S001	141
D2412674	GUIDE PLATE:VERTICAL TRANSPORT:NO.2:DRIVEN	U013_S001	142
D2412676	HOLDER:DRIVEN:BELT	U013_S001	143
D2412678	SHAFT:FLAT CONVEYER BELT:DRIVEN	U013_S001	144
D2412682	STAY:REAR:MANUAL FEED TABLE	U013_S001_S001	145
D2412685	DECAL:PAPER SET DIRECTION:MANUAL FEED	U013_S001_S001	146
D2412705	STAY:PAPER FEED UNIT:LOWER:ASS'Y	U005_S004_S001	109
		U005_S005_S001	109
D2412730	STAY:SEPARATE:PEEN	U005_S004_S001	110
		U005_S005_S001	110
D2412736	BRACKET:SEPARATE:REAR	U005_S004_S001	111
		U005_S005_S001	111
D2412741	GUIDE PLATE:VERTICAL TRANSPORT:PAPER FEED UNIT:NO.1	U005_S004	112
D2412754	COIL SPRING:PRESSURE:SEPARATE	U005_S004_S001	113
		U005_S005_S001	113
D2412759	TRANSPORT ROLLER:VERTICAL TRANSPORT:ASS'Y	U005_S004_S002	114
		U005_S005_S002	114
D2412760	STAY:PAPER FEED UNIT:UPPER:PEEN	U005_S004	115
		U005_S005	115
D2412792	TORQUE LIMITER MECHANICAL CLUTCH:40MNM:DIA18	U005_S004	116
		U005_S005	116

Copyright (c) 2006-2016 Ricoh Company, Ltd. 2016/07/29 Version 1.00

Number	Part Name	Group	ID
D2412837	DECAL:SET:SIDE FENCE:AUXILIARY	U005_S009	117
D2412865	COVER:PAPER TRAY:NO.1	U005_S008	118
D2412869	DECAL:SIZE INDICATION:SIDE FENCE:NO.2	U005_S009	119
D2412873	SIDE FENCE:AUXILIARY	U005_S009_S005	120
		U005_S009_S006	120
D2412875	SIDE FENCE:FRONT:ASS'Y	U005_S009_S003	121
D2412880	SIDE FENCE:REAR:ASS'Y	U005_S009_S004	122
D2412883	DECAL:SIZE INDICATION:SIDE FENCE:AUXILIARY:FRONT	U005_S009	123
D2412884	DECAL:SIZE INDICATION:SIDE FENCE:AUXILIARY:REAR	U005_S009	124
D2412885	DECAL:SIDE FENCE:AUXILIARY	U005_S009_S005	125
		U005_S009_S006	125
D2412991	PLAIN SHAFT BEARING:INNER:DRIVE:REGISTRATION ROLLER	U010	43
D2412993	STOPPER:REGISTRATION ROLLER	U010	44
D2412994	COMPRESSION SPRING:REGISTRATION:INNER:DRIVE	U010	45
D2413336	COVER:GEAR:TONER SUPPLY SUB-UNIT:C	U006	35
D2413358	(NA(D24417)):SENSOR COVER:V	U006_S009	36
		U006_S010	36
		U006_S011	36
		U006_S012	36
D2414023	HOLDER:DRIVEN ROLLER:FUSING EXIT:FRONT	U011_S001	55
		U011_S002	55
		U011_S003	55
		U011_S004	55
		U011_S005	55
D2414024	HOLDER:DRIVEN ROLLER:FUSING EXIT:REAR	U011_S001	56
		U011_S002	56
		U011_S003	56
		U011_S004	56
		U011_S005	56
D2414102	DRIVEN ROLLER:FUSING EXIT:AS	U011_S001	57

Number	Part Name	Group	ID
	S'Y	U011_S002	57
		U011_S003	57
		U011_S004	57
		U011_S005	57
D2414105	GUIDE PLATE:FUSING EXIT:LEFT	U011_S001	58
		U011_S002	58
		U011_S003	58
		U011_S004	58
		U011_S005	58
D2414113	BRACKET:THERMISTOR:PRESSURE ROLLER	U011_S001	59
		U011_S002	59
		U011_S003	59
		U011_S004	59
		U011_S005	59
D2414121	INNER COVER:PRESSURE ROLLER:REAR	U011_S001	60
		U011_S002	60
		U011_S003	60
		U011_S004	60
		U011_S005	60
D2414122	INNER COVER:PRESSURE ROLLER:FRONT	U011_S001	61
		U011_S002	61
		U011_S003	61
		U011_S004	61
		U011_S005	61
D2414123	DISCHARGE BRUSH:PRESSURE ROLLER	U011_S001	62
		U011_S002	62
		U011_S003	62
		U011_S004	62
		U011_S005	62
D2414137	LEVER:PRESSURE:FRONT:PEEN	U011_S001	63
		U011_S002	63
		U011_S003	63
		U011_S004	63
		U011_S005	63
D2414140	HOLDER:PRESSURE:FRONT:ASS'Y	U011_S001	64
		U011_S002	64
		U011_S003	64
		U011_S004	64

Copyright (c) 2006-2016 Ricoh Company, Ltd. 2016/07/29 Version 1.00

Number	Part Name	Group	ID
		U011_S005	64
D2414155	HOLDER:PRESSURE:REAR:ASS'Y	U011_S001	65
		U011_S002	65
		U011_S003	65
		U011_S004	65
		U011_S005	65
D2414160	LEVER:PRESSURE:REAR:PEEN	U011_S001	66
		U011_S002	66
		U011_S003	66
		U011_S004	66
		U011_S005	66
D2414212	GATE PAWL:FUSING EXIT	U011_S001	67
		U011_S002	67
		U011_S003	67
		U011_S004	67
		U011_S005	67
D2414214	EXIT ROLLER:FUSING EXIT:RIGHT	U011_S001	68
		U011_S002	68
		U011_S003	68
		U011_S004	68
		U011_S005	68
D2414215	GUIDE:FUSING EXIT:RIGHT:ASS'Y	U011_S001	69
		U011_S002	69
		U011_S003	69
		U011_S004	69
		U011_S005	69
D2414218	LINK:GATE PAWL:FUSING EXIT	U011_S001	70
		U011_S002	70
		U011_S003	70
		U011_S004	70
		U011_S005	70
D2414219	DECAL:C:GUIDE PLATE:FUSING EXIT	U011_S001	71
		U011_S002	71
		U011_S003	71
		U011_S004	71
		U011_S005	71
D2414221	STRIPPER PLATE:FUSING EXIT:ASS'Y	U011_S001	72
		U011_S002	72

Number	Part Name	Group	ID
		U011_S003	72
		U011_S004	72
		U011_S005	72
D2414252	FUSING ENTRANCE GUIDE PLATE	U011_S001	73
		U011_S002	73
		U011_S003	73
		U011_S004	73
		U011_S005	73
D2414261	FUSING COVER:UPPER	U011_S001	74
		U011_S002	74
		U011_S003	74
		U011_S004	74
		U011_S005	74
D2414317	GUIDE:HARNESS:DRAWER:PRESS FIT	U011_S001	75
		U011_S002	75
		U011_S003	75
		U011_S004	75
		U011_S005	75
D2414332	HOUSING:THERMOSTAT	U011_S001	76
		U011_S002	76
		U011_S003	76
		U011_S004	76
		U011_S005	76
D2414334	COVER:HOUSING:THERMOSTAT	U011_S001	77
		U011_S002	77
		U011_S003	77
		U011_S004	77
		U011_S005	77
D2414337	TERMINAL:THERMOSTAT:DRAWER	U011_S001	78
		U011_S002	78
		U011_S003	78
		U011_S004	78
		U011_S005	78
D2414338	TERMINAL:THERMOSTAT:HEATER	U011_S001	79
		U011_S002	79
		U011_S003	79
		U011_S004	79
		U011_S005	79

Copyright (c) 2006-2016 Ricoh Company, Ltd. 2016/07/29 Version 1.00

Number	Part Name	Group	ID
D2414342	HOUSING:NON-CONTACT TYPE THERMISTOR	U011_S001	80
		U011_S002	80
		U011_S003	80
		U011_S004	80
		U011_S005	80
D2414365	HOLDER:THERMOPILE	U011	81
D2414366	BRACKET:THERMOPILE	U011	82
D2414367	STOPPER:THERMOPILE	U011	83
D2414441	GUIDE PLATE:EXIT:UPPER	U012	35
D2414458	GUIDE:COVER:UPPER	U001	62
D2414461	GUIDE PLATE:REVERSE:UPPER	U012	36
D2414466	GUIDE PLATE:REVERSE:LOWER	U012	37
D2414472	END FENCE:TRAY:EXIT:ASS'Y	ACCESSORIES	33
D2414476	EXIT ROLLER	U012	38
D2414481	GATE PAWL:EXIT	U012	39
D2414483	LEVER:GATE PAWL	U012	40
D2414494	TRAY:AUXILIARY:EXIT	U012	41
D2414497	TRAY:EXIT	U012	42
D2414499	COMPRESSION SPRING:BASE:TRAY:EXIT	U012	43
D2414635	SHEET:CUSHION	U013_S001	147
D2414640	TRANSPORT ROLLER:EXIT:DIA8	U013_S001	148
D2414642	TRANSPORT ROLLER:DUPLEX:1	U013_S001	149
D2414643	TRANSPORT ROLLER:ENTRANCE	U013_S001	150
D2414644	GEAR:MECHANICAL ROLLER CLUTCH	U013_S001	151
D2414652	GEAR:PULLEY:SWIVEL	U013_S001	152
D2414660	GUIDE PLATE:UPPER:RIGHT:DUPLEX	U013_S001	153
D2414673	GUIDE PLATE:DRIVEN	U013_S001	154
D2414676	LEVER:PRESSURE:DUPLEX	U013_S001	155
D2414677	COMPRESSION SPRING:EXIT:UPPER	U013_S001	156
D2414684	GEAR:OUTPUT	U013_S001	157
D2414692	INNER COVER:REAR:DUPLEX	U013_S001	158
D2414693	INNER COVER:FRONT:DUPLEX	U013_S001	159
D2414694	CAP:BELT:DUPLEX	U013_S001	160
D2414707	GEAR:FEED:MANUAL FEED:DRIVE	U013_S001	161

Number	Part Name	Group	ID
D2414708	GEAR:SEPARATOR:MANUAL FEED:DRIVE	U013_S001	162
D2414709	GEAR:TRANSPORT ROLLER:MANUAL FEED	U013_S001	163
D2414710	GEAR:IDLER	U013_S001	164
D2414750	BRACKET:MOTOR:DUPLEX	U013	165
D2414755	GEAR:OUTPUT:DUPLEX:ENTRANCE	U013	166
D2414761	DRIVEN ROLLER:DIA16	U013_S001	167
D2414762	DRIVEN ROLLER:DIA18	U013_S001	168
D2414763	GUIDE:HARNESS:ENTRANCE SENSOR:DUPLEX	U013_S001	169
D2414765	PULLEY:T26	U013_S001	170
D2414766	PULLEY:T26/T26	U013_S001	171
D2414923	STAY:CONTACT POINT:DUPLEX	U013_S001	172
D2414929	DC SOLENOID:FUSING EXIT:ASS'Y	U012	44
D2414936	INNER COVER:EXIT	U012	45
D2414937	TENSION SPRING:GATE:REVERSE	U012	46
D2414938	TENSION SPRING:LINK:DC SOLENOID:FUSING EXIT	U012	47
D2414941	GATE PAWL:REVERSE:FRONT MIDDLE	U012	48
D2414942	GATE PAWL:REVERSE:REAR MIDDLE	U012	49
D2414943	GATE PAWL:REVERSE:REAR	U012	50
D2414946	SHAFT:GATE PAWL:REVERSE	U012	51
D2414947	GATE PAWL:REVERSE:FRONT	U012	52
D2414948	GUIDE:HARNESS:REVERSE	U012	53
D2414950	ROLLER:EXIT:PRESSURE:2TYPE:ASS'Y	U012_S001	54
D2414953	(NA/EU/AA,KOR/TWN):ROLLER:EXIT:PRESSURE:1TYPE:ASS'Y	ACCESSORIES	34
D2414955	HOLDER:ROLLER:EXIT:PRESSURE:2TYPE	U012	55
D2414957	SHAFT:ROLLER:PRESSURE:EXIT:2TYPE	U012_S001	56
D2414962	ROLLER:DRIVEN:EXIT	U012_S001	57

Copyright (c) 2006-2016 Ricoh Company, Ltd. 2016/07/29 Version 1.00

Number	Part Name	Group	ID
D2414964	ROLLER:EXIT:PRESSURE	U012_S001	58
D2414965	COLLAR:ROLLER:EXIT:PRESSURE	U012_S001	59
D2414968	(NA/EU/AA,KOR/TWN):ROLLER:EXIT:PRESSURE:1TYPE:MIDDLE	ACCESSORIES	35
D2414973	(NA/EU/AA,KOR/TWN):ROLLER:EXIT:PRESSURE:1TYPE:BOTH ENDS	ACCESSORIES	36
D2414976	ROLLER:EXIT:PRESSURE:MIDDLE	U012_S001	60
D2414977	ROLLER:DRIVEN:EXIT:MIDDLE	U012_S001	61
D2414978	COLLAR:ROLLER:EXIT:PRESSURE:BOTH ENDS	U012_S001	62
D2414981	COIL SPRING:ROLLER:PRESSURE:EXIT	U012	63
D2414987	(NA/EU/AA,KOR/TWN):GUIDE:EXIT:AUXILIARY:MIDDLE	ACCESSORIES	37
D2414988	(NA/EU/AA,KOR/TWN):GUIDE:EXIT:AUXILIARY:BOTH ENDS	ACCESSORIES	38
D2414990	(NA/EU/AA,KOR/TWN):GUIDE PLATE:EXIT:AUXILIARY	ACCESSORIES	39
D2414992	DISCHARGE BRUSH:EXIT	U012	64
D2414994	GUIDE PLATE:EXIT:LOWER	U012	65
D2414995	GUIDE PLATE:UPPER	U013_S001	173
D2414996	DC SOLENOID:ASS'Y	U012	66
D2414998	CUSHION:DC SOLENOID:4MM	U012	67
D2415109	(CHN):PCB:IOB:TRANSPORT	U015	70
D2415112	(CHN):PCB:IOB:ENGINE	U015	71
D2415190	(CHN):PCB:MSENS1	U015	72
D2415192	(CHN):PCB:MSENS2	U015	73
D2415707	BRACKET:HUMAN DETECTION SENSOR	U015	74
D2415711	COVER:HUMAN DETECTION SENSOR:CONNECTOR	U001	63
D2415712	PLATE:HUMAN DETECTION SENSOR:SENSOR	U015	75
D2415737	BRACKET:MAIN SWITCH	U015	76
D2415764	COVER:POWER PACK:CB	U015_S001	77
D2415765	CASE:POWER PACK:CB	U015_S001	78
D2415796	RACK:MIDDLE	U015	79
D2415800	RACK:RIGHT:AUXILIARY	U015	80

Number	Part Name	Group	ID
D2415801	COVER:RACK:REAR	U015	81
D2415802	GUIDE:FFC:SCANNER	U015	82
D2415803	GUIDE:HARNESS:C/T BOX	U015	83
D2415817	GUIDE:FFC:2	U015	84
D2415831	CAP:GUIDE:WIRE	U015_S001	85
D2415832	CAP:GUIDE:COIL SPRING	U015_S001	86
D2415841	BASE:GUIDE:WIRE	U015_S001	87
D2415842	COVER:GUIDE:WIRE	U015_S001	88
D2415850	WIRE:CHARGE:K	U015_S001	89
D2415851	WIRE:DEVELOPMENT:K	U015_S001	90
D2415852	WIRE:CHARGE:C	U015_S001	91
D2415853	WIRE:DEVELOPMENT:C	U015_S001	92
D2415854	WIRE:CHARGE:M	U015_S001	93
D2415855	WIRE:DEVELOPMENT:M	U015_S001	94
D2415856	WIRE:CHARGE:Y	U015_S001	95
D2415857	WIRE:DEVELOPMENT:Y	U015_S001	96
D2415875	WIRE:CHARGE:CB	U015_S001	97
D2415876	WIRE:DEVELOPMENT:CB:K	U015_S001	98
D2415877	WIRE:DEVELOPMENT:CB:C	U015_S001	99
D2415878	WIRE:DEVELOPMENT:CB:M	U015_S001	100
D2415879	WIRE:DEVELOPMENT:CB:Y	U015_S001	101
D2415889	SPRING PLATE:IMAGE PROCESSING UNIT	U015	102
D2416001	TRANSFER UNIT:INTERMEDIATE TRANSFER:ASS'Y	U008_S001	35
D2416097	FLAT BELT-TRANSFER:INTERMEDIATE TRANSFER:TT	U008_S001	36
D2416141	CLEANING UNIT:BELT CLEANING:ASS'Y	U008_S003	37
D2416212	TRANSFER ROLLER:SECOND:ASS'Y	U010_S002	46
D2416215	GUIDE PLATE:TRANSFER:SECOND:ASS'Y	U010_S001	47
D2416240	LEVER:PRESSURE:TRANSFER ROLLER:FRONT:DIA19.5	U010_S001	48
D2416241	LEVER:PRESSURE:TRANSFER ROLLER:REAR:DIA19.5	U010_S001	49
D2416244	GROUND PLATE:SEPARATION	U010_S001	50

Copyright (c) 2006-2016 Ricoh Company, Ltd.

Exclusive Parts

Number	Part Name	Group	ID
D2416256	GROUND PLATE:GUIDE:TRANSPORT	U010_S001	51
D2416258	COVER:TRANSFER/SEPARATION UNIT	U010_S001	52
D2416275	SHEET:ENTRANCE:TRANSFER	U010_S001	53
D2416290	LED:RED	U010_S001	54
D2416335	COVER:INTERMEDIATE TRANSFER	ACCESSORIES	40
D2417911	DUCT:DEVELOPMENT:FRONT	U001	64
D2417913	DUCT:OPTICAL WRITING UNIT	U001	65
D2417941	DUCT:EXHAUST:UPPER:A	U016	41
D2417942	DUCT:EXHAUST:UPPER:B	U016	42
D2417943	DUCT:EXHAUST:UPPER:C	U016	43
D2417944	DUCT:EXHAUST:UPPER:D	U016	44
D2417945	DEODORIZE FILTER	U016	45
D2417983	DUCT:DEVELOPMENT:REAR:A	U016	46
D2417984	DUCT:DEVELOPMENT:REAR:B	U016	47
D2421265	COVER:RIGHT:REAR	U001	66
D2421267	COVER:RIGHT:UPPER	U001	67
D2425184	(NA/TWN):AC CONTROL BOARD	U015	103
D2425186	(EU/AA,KOR/CHN):AC CONTROL BOARD	U015	104
D2425605	PCB:DDR3-DIMM:RC-C:2GB:ASS'Y	U015	105
D2426400	COLLECTION BOTTLE:ASS'Y	U009_S001	34
D2426432	FEELER:COLLECTION BOTTLE	U009_S001	35
D2436752	(D243:NA/EU/AA,KOR/TWN):DECAL:MODEL NAME PLATE:RIC	ACCESSORIES	41
D2441117	DRIVE UNIT:ENGINE:ASS'Y	U014_S004	57
D2441276	INNER COVER:TONER BOTTLE:	U001	68
D2442204	PCDU:K	U007_S001	8
D2442205	PCDU:C	U007_S002	9
D2442206	PCDU:M	U007_S003	10
D2442207	PCDU:Y	U007_S004	11
D2442209	PCU:KCMY	U007_S001_S001	12
		U007_S002_S001	12
		U007_S003_S001	12
		U007_S004_S001	12
D2442711	PAPER FEED UNIT:NO.1:ASS'Y	U005_S004	126

Number	Part Name	Group	ID
D2442712	PAPER FEED UNIT:NO.2:ASS'Y	U005_S005	127
D2442800	PAPER TRAY:NO.1:ASS'Y	U005_S008	128
D2442805	PAPER TRAY:NO.2:ASS'Y	U005_S009	129
D2443020	DEVELOPMENT UNIT:K	U007_S001_S002	13
D2443021	DEVELOPMENT UNIT:C	U007_S002_S002	14
D2443022	DEVELOPMENT UNIT:M	U007_S003_S002	15
D2443023	DEVELOPMENT UNIT:Y	U007_S004_S002	16
D2444011	(NA):FUSING UNIT	U011_S004	84
D2444013	(TWN):FUSING UNIT	U011_S005	85
D2444041	(NA):SLEEVE:FUSING	U011_S004_S001	86
D2444043	(TWN):SLEEVE:FUSING	U011_S005_S001	87
D2444262	(NA/TWN):FUSING COVER:LOWER	U011_S004	88
		U011_S005	88
D2444511	DUPLEX UNIT:ASS'Y	U013_S001	174
D2445109	(NA/EU/AA,KOR/TWN):PCB:IOB:TRANSPORT	U015	106
D2445112	(NA/EU/AA,KOR/TWN):PCB:IOB:ENGINE	U015	107
D2445114	(NA/EU/AA,KOR/TWN):BCU:TYPE-H3:ASS'Y	U015	108
D2445190	(NA/EU/AA,KOR/TWN):PCB:MSENS1	U015	109
D2445192	(NA/EU/AA,KOR/TWN):PCB:MSENS2	U015	110
D2445644	(NA/EU/AA,KOR/TWN):PCB:IMAGE PROCESSING UNIT	U015	111
D2445730	PCB:DCSW	U015	112
D2446511	PIPE:ASS'Y	U009_S002	36
D2446752	(D244:NA/EU/AA,KOR/TWN):DECAL:MODEL NAME PLATE:RIC	ACCESSORIES	42
D2447851	(NA):CD-ROM:DRV:ASS'Y	ACCESSORIES	43
D2447852	(EU):CD-ROM:DRV:ASS'Y	ACCESSORIES	44
D2447853	(AA,KOR):CD-ROM:DRV:ASS'Y	ACCESSORIES	45
D2557798	(NA/EU/AA/KOR/TWN):DECAL:BLUETOOTH	ACCESSORIES	46
D2621652	(CHN):DECAL	ACCESSORIES	47
D2891750	CARRIAGE:SCANNER:ASS'Y	U003_S001	58
D3B06303	(EU):DECAL:CAUTION:ORIGINAL:	ACCESSORIES	48

Copyright (c) 2006-2016 Ricoh Company, Ltd. 2016/07/29 Version 1.00

Number	Part Name	Group	ID
	MANY LANGUAGES		
D3BR6211	TRANSFER ROLLER:SECOND:DIA 19.5:OPTION:ASS'Y	Imageable Area E xtension Unit Typ e M19	1
D6836031	(EU):DECAL:SET:ORIGINAL TABLE	ACCESSORIES	49
D6846031	(NA/EU/TWN):DECAL:ORIGINAL TA BLE	ACCESSORIES	50
D6846061	(NA/EU/TWN):DECAL::ORIGINAL:M ANY LANGUAGES	ACCESSORIES	51
D6932867	SUPPORTING PLATE:COVER:FRO NT:PAPER TRAY	U005_S009	130
D7390116	(NA/TWN):HEATER:PHOTOCONDU CTOR:ASS'Y	KIT:HEATER:PH OTOCONDUCTO R	1
D7390117	(EU/AA,KOR/CHN):HEATER:PHOT OCONDUCTOR:ASS'Y	KIT:HEATER:PH OTOCONDUCTO R	2
D7392269	COVER:HEATER:PHOTOCONDUC TOR	KIT:HEATER:PH OTOCONDUCTO R:SUB PARTS	2
D7396801	DECAL:H-TEMP WARNING:HEATE R:OPTION	KIT:HEATER:PH OTOCONDUCTO R:SUB PARTS	3
G0652767	LEVER - FEED	U005_S004	131
		U005_S005	131
GA003268	DECAL:PDF:I-GRAY:ABS	ACCESSORIES	52
GA143003	SCREW:MM5:2.5MM	U005	132
		U010_S001	55
GW010007	PHOTO REFLECTION SENSOR:EXI T	U005	133
		U005_S004	133
		U005_S005	133
		U012	68
		U013_S001	175
GW010009	DENSITY SENSOR	U008	38
GW020022	PHOTOINTERRUPTOR:LG2A24BL1	U003	59
GW230008	TONER END SENSOR	U006_S009	37
		U006_S010	37
		U006_S011	37

Number	Part Name	Group	ID
		U006_S012	37
M0262734	DECAL:H-TEMP WARNING:HEATE R	HEATER:PAPER TRAY:ASS'Y:SUB PARTS	5
M0662743	FRICTION PAD:MANUAL FEED TA BLE:18X7.5	U013_S001_S001	176
Note	See 2D parts catalog for the compon ents of the Smart Operation Panel.	U002_S001	10
VSSG9002	FLUOTRIBO MG GREASE: 100G	SPECIAL TOOLS	8

Copyright (c) 2006-2016 Ricoh Company, Ltd. 2016/07/29 Version 1.00

Standard Parts

03130060N
SCREW - M3X6

03140120N
SCREW - M4X12

03530030N
SCREW:M3X3

03530040N
SCREW - M3X4

03530060N
BIND SCREW - M3X6

03603006N
SCREW - M3X6

03603016N
SCREW - M3X16

04503025N
TAPPING SCREW:3X25

04503035N
TAPPING SCREW:3X35

04513006N
TAPPING SCREW - 3X6

04513008N
TAPPING SCREW - M3X8

04513025N
TAPPING SCREW:M3X25

04533008N
BINDING SELF TAPPING SC
REW:3X8

04543006N
TAPPING SCREW:ROUND P
OINT:3X6

04543006Q
TAPPING SCREW - M3X6

04543008N
TAPPING SCREW:ROUND P
OINT:3X8

04543008Q
TAPPING SCREW:3X8

04543010Q
TAPPING SCREW:3X10

04543020Q
TAPPING SCREW::3X20

04583008N
HEXAGON HEAD TAPPING S
CREW:3X8

04583010N
HEXAGON HEAD TAPPING S
CREW:3X10

04593008N
BINDING HEAD TAPPING SC
REW:3X8

04593010N
BINDING HEAD TAPPING SC
REW:3X10

06220080E
SPRING PIN - 2X8MM

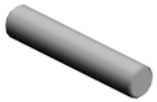

06320100G
PIN - 2X10MM

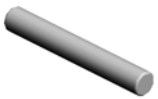

06320140G
PARALLEL PIN

06330100G
PARALLEL PIN - 3X10

07200020G
RETAINING RING - M2

Copyright (c) 2006-2016 Ricoh Company, Ltd. 2016/07/29 Version 1.00

Standard Parts

07200025E
RETAINING RING - M2.5

07200030E
RETAINING RING - M3

07200040E
RETAINING RING - M4

07200060E
RETAINING RING - M6

07250170E
RETAINING RING C - M17

07403808
BALL BEARING - 8X16X5MM

08025299
TAPPING SCREW - M3X8

08025328
HEXAGON HEAD TAPPING SCREW:3X40

08046123
HEXAGONAL BOLT:W/WASHER:M3X8

08046129
HEXAGON HEAD BOLT:IB-LOCK:M3X6

08050089
RETAINING RING - M4

08050103
RETAINING RINGS-E:SILENCER:DIA3

08050104
RETAINING RINGS-E:SILENCER:DIA4

09543005N
SCREW:POLISHED ROUND/SPRING:M3X5

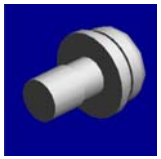

09544008N
SCREW - M4X8

09573010N
SCREW:SMALL ROUND/SPRING:M3X10

09574008N
SCREW:SMALL ROUND/SPRING:M4X8

11050409
CARD SPACER- 6.4MM

11050488
HARNESS CLAMP

11050655
CLAMP:LWSR-1816S

11050692
CLAMP:LES-0503

11050713
CLAMP:LWSM-0306H GRAY

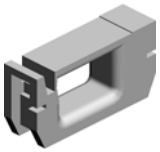

11050723
CLAMPS:WES-0507

11050724
CLAMPS:WES-1210

11050725
CLAMPS:WES-1117

11050726
CLAMPS:WES-2217

11050752
SADDLE:EDS-3005LS-V0

11050758
CLAMP:LWSM-0306A

Copyright (c) 2006-2016 Ricoh Company, Ltd. 2016/07/29 Version 1.00

Standard Parts

11050759
CLAMP:LWSM-0605A

11050760
CLAMP:LWSM-0511A

11050762
CLAMP:LWS-0711A

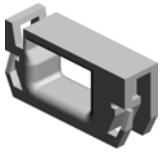

11050764
CLAMP:LWS-1316A

11050765
CLAMP:LWS-2218A

11500440
(NA):POWER SUPPLY CODE:120V:15A

11500441
(EU/AA,KOR):POWER SUPPLY CODE:250V:10A

11500442
(CHN):POWER SUPPLY CODE:250V:10A

11500443
(TWN):POWER SUPPLY CODE:125V:15A

12042612
MICRO SWITCH:D3V-16506-3C25

14078389
EEPROM:BR24T128-W

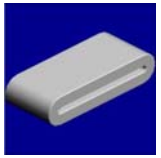

16072470
(CHN):FERRITE CORE:GRFC-10

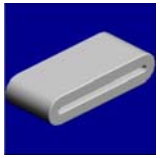

16072525
FERRITE CORE:K3 FF 35.00X14.60X7.70X1.40

Copyright (c) 2006-2016 Ricoh Company, Ltd.

Number	Part Name	Num	Group	ID
D2416001	TRANSFER UNIT:INTERMEDIATE TRANSFER:ASS'Y	1	U008_S001	35
D2416141	CLEANING UNIT:BELT CLEANING:ASS'Y	1	U008_S003	37
D2426400	COLLECTION BOTTLE:ASS'Y	1	U009_S001	34
D2442209	PCU:KCMY	4	U007_S001_S001	12
			U007_S002_S001	12
			U007_S003_S001	12
			U007_S004_S001	12
D2443020	DEVELOPMENT UNIT:K	1	U007_S001_S002	13
D2443021	DEVELOPMENT UNIT:C	1	U007_S002_S002	14
D2443022	DEVELOPMENT UNIT:M	1	U007_S003_S002	15
D2443023	DEVELOPMENT UNIT:Y	1	U007_S004_S002	16

Copyright (c) 2006-2016 Ricoh Company, Ltd.